TRANSMISSION SERVICE AGREEMENT

FOR

DEVELOPMENT AND OPERATION OF INTER-STATE TRANSMISSION SYSTEM

FOR TRANSMISSION OF ELECTRICITY THROUGH TARIFF BASED COMPETITIVE BIDDING FOR

INTER-REGIONAL STRENGTHENING BETWEEN SR GRID AND ER GRID

BETWEEN

CENTRAL TRANSMISSION UTILITY OF INDIA LIMITED

(NODAL AGENCY)

AND

{SPV UNDER INCORPORATION}

June 23, 2025

CONTENTS

1	Definitions and Interpretations	5
2	Effectiveness and Term of Agreement	17
3	Conditions Subsequent	19
4	Development of the Project	23
5	Construction of the Project	27
6	Connection and commissioning of the Project	31
7	Operation and Maintenance of the Project	36
8	Availability of the project	37
9	Insurances	38
10	Billing And Payment of Transmission Charges	40
11	Force Majeure	41
12	Change in Law	45
13	Events of Default and Termination	47
14	Liability and Indemnification	52
15	Assignments and Charges	57
16	Governing Law and Dispute Resolution	59
17	Representation and Warranties	61
18	Independent Engineer	63
19	Miscellaneous Provisions	65

THIS TRANSMISISON SERVICE AGREEMENT (hereinafter referred to as "TSA" or "Agreement" or "the Agreement" or "this Agreement") is made on the …… [Insert day] of……. [Insert month] of Two Thousand and…… [Insert Year]

BETWEEN:

The **Central Transmission Utility of India Limited,** "Saudamini",1st Floor, Plot No. 2, Sector-29, Gurugram-122001, Haryana acting as a Nodal Agency (referred to as the "Nodal Agency"), which expression shall unless repugnant to the context or meaning thereof include its successors, and permitted assigns) as Party of the one part;

AND

{SPV UNDER INCORPORATION} incorporated under the Companies Act, 1956/ Companies Act, 2013 (as the case may be), having its registered office at _____ (herein after referred to as "Transmission Service Provider" or "TSP" or "ISTS Licensee", which expression shall unless repugnant to the context or meaning thereof include its successors, and permitted assigns) as Party of the other part;

("Nodal Agency" and "TSP" are individually referred to as "Party" and collectively as the "Parties")

AND WHEREAS:

A) In accordance with the Bidding Guidelines, the Bid Process Coordinator (hereinafter referred to as BPC) had initiated a competitive e-reverse bidding process through issue of RFP for selecting a Successful Bidder to build, own, operate and transfer the Project comprising of the Elements mentioned in Schedule 1 (hereinafter referred to as the Project)

B) Pursuant to the said e-reverse bidding process, the BPC has identified the Successful Bidder, who will be responsible to set up the Project on build, own, operate and transfer basis to provide Transmission Service in accordance with the terms of this Agreement and the Transmission License.

C) The Selected Bidder have submitted the Contract Performance Guarantee and acquired one hundred percent (100%) of the equity shareholding of **{SPV UNDER INCORPORATION}**, along with all its related assets and liabilities in terms of the provisions of the Share Purchase Agreement.

D) The TSP has agreed to make an application for a Transmission License to the Commission for setting up the Project on build, own, operate and transfer basis.

E) The TSP has further agreed to make an application to the Commission for the adoption of the Transmission Charges under Section 63 of the Electricity Act, 2003,

along with a certification from the Bid Evaluation Committee in accordance with the Bidding Guidelines issued by Ministry of Power, Government of India.

F) The TSP has agreed to execute the agreement(s) required, if any, under Sharing Regulations within fifteen (15) days from the date of grant of Transmission License from the Commission.

G) The TSP agrees to the terms and conditions laid down under Sharing Regulations, for making available the ISTS and charge the Transmission Charges in accordance with the terms and conditions of Sharing Regulations.

H) The billing, collection and disbursement of the Transmission Charges by the CTU to the ISTS Licensee shall be governed as per Sharing Regulations.

I) The terms and conditions stipulated in the Transmission License issued by the Commission to the TSP shall be applicable to this Agreement and the TSP agrees to comply with these terms and conditions. In case of inconsistency between the Transmission License terms & conditions and the conditions of this Agreement, the conditions stipulated in the Transmission License granted by the Commission shall prevail.

NOW, THEREFORE, IN CONSIDERATION OF THE PREMISES AND MUTUAL AGREEMENTS, COVENANTS AND CONDITIONS SET FORTH HEREIN, IT IS HEREBY AGREED BY AND BETWEEN THE PARTIES HERETO AS FOLLOWS:

ARTICLE: 1

1. DEFINITIONS AND INTERPRETATIONS

1.1 Definitions:

1.1.1 The words / expressions used in this Agreement, unless as defined below or repugnant to the context, shall have the same meaning as assigned to them by the Electricity Act, 2003 and the rules or regulations framed there under including those issued / framed by the Commission (as defined hereunder), as amended or re-enacted from time to time or the General Clauses Act, failing which it shall bear its ordinary English meaning.

The words/expressions when used in this Agreement shall have the respective meanings as specified below:

"Acquisition Price" shall have the same meaning as defined in the Share Purchase Agreement;

"Act" or **"Electricity Act"** or **"Electricity Act 2003"** shall mean the Electricity Act, 2003 and any amendments made to the same or any succeeding enactment thereof;

"Affiliate" shall mean a company that either directly or indirectly

i. controls or

ii. is controlled by or

iii. is under common control with

a Bidding Company (in the case of a single company) or a Member (in the case of a Consortium) and "**control**" means ownership by one entity of at least twenty six percent (26%) of the voting rights of the other entity;

"Availability" in relation to the Project or in relation to any Element of the Project, for a given period shall mean the time in hours during that period the Project is capable to transmit electricity at its Rated Voltage and shall be expressed in percentage of total hours in the given period and shall be calculated as per the procedure contained in **Appendix –IV to Central Electricity Regulatory Commission (Terms and Conditions of Tariff) Regulations, 2024,** attached herewith in Schedule 6;

"Bid" shall mean technical bid and financial bid submitted by the Bidder, in response to the RFP, in accordance with the terms and conditions of the RFP;

"Bid Deadline" shall mean the last date and time for submission of the Bid in response to RFP, as specified in the RFP;

"Bidding Company" shall refer to such single company that has made a Response to RFP for the Project;

"Bidding Consortium / Consortium" shall refer to a group of companies that has collectively made a Response to RFP for the Project;

"Bid Documents" or **"Bidding Documents"** shall mean the RFP, along with all attachments thereto or clarifications thereof;

"Bidding Guidelines" shall mean the "Tariff Based Competitive Bidding Guidelines for Transmission Service" and "Guidelines for Encouraging Competition in Development of Transmission Projects" issued by Government of India, Ministry of Power under Section – 63 of the Electricity Act as amended from time to time;

"Bid Process Coordinator" or **"BPC"** shall mean a person or its authorized representative as notified by the Government of India, responsible for carrying out the process for selection of Bidder who will acquire Transmission Service Provider;

"Bill" shall mean any bill raised by the CTU on the DICs to recover the Transmission Charges pursuant to the Sharing Regulations;

"Business Day" shall mean a day other than Sunday or a statutory holiday, on which the banks remain open for business in the State in which the Nodal Agency's registered office is located and the concerned TSP are located;

"CEA" shall mean the Central Electricity Authority constituted under Section -70 of the Electricity Act;

"Change in law" shall have the meaning ascribed thereto in Article 12;

"Commercial Operation Date" or **"COD"** shall mean the date as per Article 6.2;

"Commission" or **"CERC"** shall mean the Central Electricity Regulatory Commission referred to in sub-section (1) of Section 76 of the Electricity Act, 2003 or its successors and assigns;

"Competent Court of Law" shall mean the Supreme Court or any High Court, or any tribunal or any similar judicial or quasi-judicial body in India that has jurisdiction to adjudicate upon issues relating to the Project;

"Connection Agreement" shall mean the agreement between the CTU or STU or any other concerned parties and the TSP, setting out the terms relating to the

connection of the Project to the Inter-connection Facilities and use of the Inter State Transmission System as per the provisions of the IEGC, as the case may be;

"Consultation Period" shall mean the period of sixty (60) days or such longer period as the Parties may agree, commencing from the date of issue of a TSP's Preliminary Notice or a Nodal Agency's Preliminary Termination Notice, as provided in Article 13 of this Agreement, for consultation between the Parties to mitigate the consequence of the relevant event having regard to all the circumstances;

"Consents, Clearances and Permits" shall mean all authorizations, licenses, approvals, registrations, permits, waivers, privileges, acknowledgements, agreements, or concessions required to be obtained from or provided by any concerned authority for the development, execution and operation of Project including without any limitation for the construction, ownership, operation and maintenance of the Transmission Lines and/or sub-stations;

"Construction Period" shall mean the period from (and including) the Effective Date of the Transmission Service Agreement up to (but not including) the COD of the Element of the Project in relation to an Element and up to (but not including) the COD of the Project in relation to the Project;

"Contractors" shall mean the engineering, procurement, construction, operation & maintenance contractors, surveyors, advisors, consultants, designers, suppliers to the TSP and each of their respective sub-contractors (and each of their respective successors and permitted assigns) in their respective capacities as such;

"Contract Performance Guarantee" Contract Performance Guarantee" shall mean the irrevocable unconditional bank guarantee, or insurance surety bond or Payment on Order Instrument submitted and to be submitted by the TSP or by the Selected Bidder on behalf of the TSP to the Nodal Agency from a bank mentioned in Annexure 17 of the RFP, in the form attached here to as Schedule 8 (for bank guarantee) or Schedule-8A (for insurance surety bond issued by any of the insurance companies authorized by Insurance Regulatory and Development Authority of India), or Schedule-8B (for Payment on Order Instrument issued by PFC/REC/IREDA) in accordance with Article 3 of this Agreement and which shall include the additional bank guarantee or insurance surety bond or Payment on Order Instrument furnished by the TSP under this Agreement;

"Contract Year", for the purpose of payment of Transmission Charges, shall mean the period beginning on the COD, and ending on the immediately succeeding March 31 and thereafter each period of 12 months beginning on April 1 and

ending on March 31 provided that the last Contract Year shall end on the last day of the term of the TSA;

"CTU" or **"Central Transmission Utility"** shall have same meaning as defined in the Electricity Act, 2003;

"Day" shall mean a day starting at 0000 hours and ending at 2400 hours;

"D/C" shall mean Double Circuit;

"Designated ISTS Customers" or **"DICs"** shall have the meaning as described in the Sharing Regulations;

"Dispute" shall mean any dispute or difference of any kind between the Parties, in connection with or arising out of this Agreement including any issue on the interpretation and scope of the terms of this Agreement as provided in Article 16;

"Effective Date" for the purposes of this Agreement, shall have the same meaning as per Article 2.1 of this Agreement;

"Electrical Inspector" shall mean a person appointed as such by the Government under sub-section (1) of Section 162 of the Electricity Act 2003 and also includes Chief Electrical Inspector;

"Electricity Rules 2005" shall mean the rules framed pursuant to the Electricity Act 2003 and as amended from time to time;

"Element" shall mean each Transmission Line or each circuit of the Transmission Lines (where there are more than one circuit) or each bay of Sub-station or switching station or HVDC terminal or inverter station of the Project, including ICTs, Reactors, SVC, FSC, etc. forming part of the ISTS, which will be owned, operated and maintained by the concerned ISTS Licensee, and which has a separate Scheduled COD as per Schedule 2 of this Agreement and has a separate percentage for recovery of Transmission Charges on achieving COD as per Schedule 5 of this Agreement;

"Event of Default" shall mean the events as defined in Article 13 of this Agreement;

"Expiry Date" shall be the date which is thirty five (35) years from the COD of the Project;

"Financial Closure" shall mean the first Business Day on which funds are made available to the TSP pursuant to the Financing Agreements;

"Financially Evaluated Entity" shall mean the company which has been evaluated for the satisfaction of the financial requirement set forth in the RFP;

"Financing Agreements" shall mean the agreements pursuant to which the TSP is to finance the Project including the loan agreements, security documents, notes, indentures, security agreements, letters of credit and other documents, as may be amended, modified, or replaced from time to time, but without in anyway increasing the liabilities of the Designated ISTS Customers / Nodal Agency;

"Financial Year" shall mean a period of twelve months at midnight Indian Standard Time (IST) between 1st April & 31st March;

"Force Majeure" and **"Force Majeure Event"** shall have the meaning assigned thereto in Article 11;

"GOI" shall mean Government of India;

"Grid Code" / "IEGC" shall mean the Grid Code specified by the Central Commission under Clause (h) of sub-section (1) of Section 79 of the Electricity Act;

"Independent Engineer" shall mean an agency/ company, appointed by Nodal Agency in accordance with the Guidelines for Encouraging Competition in Development of Transmission Projects.

"Indian Governmental Instrumentality" shall mean Government of India, Government of any State in India or any ministry, department, board, authority, agency, corporation, commission under the direct or indirect control of Government of India or any State Government or both, any political sub-division of any of them including any court or Commission or tribunal or judicial or quasi-judicial body in India but excluding the CTU, TSP and the Designated ISTS Customers;

"Insurances" shall mean the insurance cover to be obtained and maintained by the TSP in accordance with Article 9 of this Agreement;

"Interconnection Facilities" shall mean the facilities as may be set up for transmission of electricity through the use of the Project, on either one or both side of generating station's / CTU's / STU's / ISTS Licensee's / Designated ISTS Customer's substations (as the case may be) which shall include, without limitation, all other transmission lines, gantries, sub-stations and associated equipments not forming part of the Project;

"ISTS Licensee" shall be the TSP under this Agreement, consequent to having been awarded a Transmission License by the CERC and shall be referred to as the TSP or the ISTS Licensee, as the context may require in this Agreement;

"Law" or "Laws" in relation to this Agreement, shall mean all laws including electricity laws in force in India and any statute, ordinance, rule, regulation, notification, order or code, or any interpretation of any of them by an Indian Governmental Instrumentality having force of law and shall include all rules, regulations, decisions and orders of the Commission;

"Lead Member of the Bidding Consortium" or "Lead Member" shall mean a company who commits at least 26% equity stake in the Project, meets the technical requirement as specified in the RFP and so designated by other Member(s) in Bidding Consortium;

"Lenders" means the banks, financial institutions, multilateral funding agencies, non-banking financial companies registered with the Reserve Bank of India (RBI), insurance companies registered with the Insurance Regulatory & Development Authority (IRDA), pension funds regulated by the Pension Fund Regulatory & Development Authority (PFRDA),mutual funds registered with Securities & Exchange Board of India (SEBI), etc., including their successors and assigns, who have agreed on or before COD of the Project to provide the TSP with the debt financing described in the capital structure schedule, and any successor banks or financial institutions to whom their interests under the Financing Agreements may be transferred or assigned;

Provided that, such assignment or transfer shall not relieve the TSP of its obligations to the Nodal Agency under this Agreement in any manner and shall also does not lead to an increase in the liability of the Nodal Agency;

"Lenders Representative" shall mean the person notified by the Lender(s) in writing as being the representative of the Lender(s) or the Security Trustee and such person may from time to time be replaced by the Lender(s) pursuant to the Financing Agreements by written notice to the TSP;

"Letter of Intent" or **"LOI"** shall have the same meaning as in the RFP;

"Member in a Bidding Consortium / Member" shall mean each company in the Bidding Consortium;

"Month" shall mean a period of thirty (30) days from (and excluding) the date of the event;

"Monthly Transmission Charges" for any Element of the Project, after COD of the Element till COD of the Project, and for the Project after COD of the Project, shall mean the amount of Transmission Charges as specified in Schedule 5 of this Agreement multiplied by no. of days in the relevant month and divided by no. of days in the year;

"National Load Despatch Centre" shall mean the centre established as per sub-section (1) of Section 26 of the Electricity Act 2003;

"**Nodal Agency**" shall mean CTU, which shall execute and implement the Transmission Service Agreement (TSA);

Provided that while taking major decisions, CTU shall consult CEA on technical matters and any other matter it feels necessary.

"Notification" shall mean any notification, issued in the Gazette of India;

"Operating Period" for any Element of the Project shall mean the period from (and including) the COD of such Element of the Project, up to (and including) the Expiry Date and for the Project, shall mean the period from (and including) the COD of the Project, up to (and including) the Expiry Date;

"Parent Company" shall mean an entity that holds at least twenty six percent (26%) of the paid - up equity capital directly or indirectly in the Bidding Company or in the Member in a Bidding Consortium, as the case may be;

"Payment on Order Instrument" shall mean Letter of Undertaking from Indian Renewable Energy Development Agency Limited (IREDA) or Power Finance Corporation Limited (PFC) or REC Limited (REC) [the three non-banking financial institutions under Ministry of New & Renewable Energy (MNRE)/ Ministry of Power (MoP), to pay in case situation of default of Transmission Service Provider (TSP) in terms of tender conditions/Power Purchase Agreement (PPA) arises. Such Letter (s) will have same effect as that of a Bank Guarantee issued by any public any public sector bank. Such "Payment on Order instrument" would have terms and conditions similar to that of any Bank Guarantee given by any public sector bank and would promise to pay the Nodal Agency on demand within stipulated time. TSPs can seek such Letter(s) by offering due security to the above mentioned three non-banking financial institutions mentioned above (IREDA, PFC & REC). Nodal Agency shall not accept the instrument of 'Letter of Undertaking' as described above or in any other form, from any other non-banking financial institutions or bank, except IREDA, PFC & REC.

"Preliminary Termination Notice" shall mean a Nodal Agency's Preliminary Termination Notice as defined in Article 13 of this Agreement;

"Project" shall mean **"Inter-Regional Strengthening between SR Grid and ER Grid"**, as detailed in Schedule 1 of this Agreement;

"**Project Assets**" shall mean all physical and other assets relating to and forming part of the Project including:

(a) rights over the Site for substations, ROW for transmission lines;

(b) tangible & intangible assets such as civil works and equipment including foundations, embankments, pavements, electrical systems, communication systems, relief centres, administrative offices, Sub-stations, software, tower and sub-stations designs etc;

(c) project facilities situated on the Site;

(d) all rights of the TSP under the project agreements;

(e) financial assets, such as receivables, security deposits etc;

(f) insurance proceeds; and

(g) Applicable Permits and authorisations relating to or in respect of the Transmission System;"

"Project Execution Plan" shall mean the plan referred to in Article 3.1.3(c) hereof;

"Prudent Utility Practices" shall mean the practices, methods and standards that are generally accepted internationally from time to time by electric transmission utilities for the purpose of ensuring the safe, efficient and economic design, construction, commissioning, operation, repair and maintenance of the Project and which practices, methods and standards shall be adjusted as necessary, to take account of:

(i) operation, repair and maintenance guidelines given by the manufacturers to be incorporated in the Project,

(ii) the requirements of Law, and

(iii) the physical conditions at the Site;

(iv) the safety of operating personnel and human beings;

"Rated Voltage" shall mean voltage at which the Transmission System is designed to operate or such lower voltage at which the line is charged, for the time being, in consultation with the Central Transmission Utility;

"Rebate" shall have the meaning as ascribed to in Article 10.3 of this Agreement;

"RFP" shall mean Request For Proposal dated **June 23, 2025** along with all schedules, annexures and RFP Project Documents attached thereto, issued by the BPC for tariff based competitive bidding process for selection of Bidder as TSP to

execute the Project, including any modifications, amendments or alterations thereto;

"RFP Project Documents" shall mean the following documents to be entered into in respect of the Project, by the Parties to the respective agreements:

a. Transmission Service Agreement,

b. Share Purchase Agreement,

c. Agreement(s) required under Sharing Regulations and

d. Any other agreement as may be required;

"RLDC" shall mean the relevant Regional Load Dispatch Centre as defined in the Electricity Act, 2003, in the region(s) in which the Project is located;

"RPC" shall mean the relevant Regional Power Committee established by the Government of India for the specific Region(s) in accordance with the Electricity Act, 2003 for facilitating integrated operation of the Power System in that Region;

"Scheduled COD" in relation to an Element(s) shall mean the date(s) as mentioned in Schedule 2 as against such Element(s) and in relation to the Project, shall mean the date as mentioned in Schedule 2 as against such Project, subject to the provisions of Article 4.4 of this Agreement, or such date as may be mutually agreed among the Parties;

"Scheduled Outage" shall mean the final outage plan as approved by the RPC as per the provisions of the Grid Code;

"Selected Bid" shall mean the technical Bid and the Final Offer of the Selected Bidder submitted during e-reverse bidding, which shall be downloaded and attached in Schedule 7 on or prior to the Effective Date;

"Share Purchase Agreement" shall mean the agreement amongst **PFC Consulting Limited (PFCCL)**, **{SPV UNDER INCORPORATION}** and the Successful Bidder for the purchase of one hundred (100%) per cent of the shareholding of the **{SPV UNDER INCORPORATION}** for the Acquisition Price, by the Successful Bidder on the terms and conditions as contained therein;

"Sharing Regulations" shall mean the Central Electricity Regulatory Commission (Sharing of Inter-State Transmission Charges and Losses) Regulations, 2020 and as amended from time to time;

"Site" in relation to a substation, switching station or HVDC terminal or inverter station, shall mean the land and other places upon which such station / terminal is to be established;

"SLDC" shall mean the State Load Despatch Centre established as per sub-section (1) of Section 31 of the Electricity Act 2003;

"STU" or **"State Transmission Utility"** shall be the Board or the Government company, specified as such by the State Government under sub-section (1) of Section 39 of the Electricity Act 2003;

"Successful Bidder" or **"Selected Bidder"** shall mean the Bidder selected pursuant to the RFP and who has to acquire one hundred percent (100%) equity shares of **{SPV UNDER INCORPORATION},** along with all its related assets and liabilities, which will be responsible as the TSP to establish the Project on build, own, operate and transfer basis as per the terms of the TSA and other RFP Project Documents;

"TSP's Preliminary Notice" shall mean a notice issued by the TSP in pursuant to the provisions of Article 13.3 of this Agreement;

"Target Availability" shall have the meaning as ascribed hereto in Article 8.2 of this Agreement;

"Technically Evaluated Entity" shall mean the company which has been evaluated for the satisfaction of the technical requirement set forth in RFP;

"Termination Notice" shall mean a Nodal Agency's Termination Notice given by the Nodal Agency to the TSP pursuant to the provisions of Articles 3.3.2, 3.3.4, 4.4.2, 5.8, 13.2 and 13.3 of this Agreement for the termination of this Agreement;

"Term of Agreement" for the purposes of this Agreement shall have the meaning ascribed thereto in Article 2.2 of this Agreement;

"Transmission Charges" shall mean the Final Offer of the Selected Bidder during the e-reverse bidding and adopted by the Commission, payable to the TSP as per Sharing Regulations;

"Transmission License" shall mean the license granted by the Commission in terms of the relevant regulations for grant of such license issued under the Electricity Act;

"Transmission Service" shall mean making the Project available as per the terms and conditions of this Agreement and Sharing Regulations;

"Unscheduled Outage" shall mean an interruption resulting in reduction of the Availability of the Element(s) / Project (as the case may be) that is not a result of a Scheduled Outage or a Force Majeure Event.

"Ultimate Parent Company" shall mean an entity which owns at least twenty six percent (26%) equity in the Bidding Company or Member of a Consortium, (as the case may be) and in the Technically Evaluated Entity and / or Financially Evaluated Entity (as the case may be) and such Bidding Company or Member of a Consortium, (as the case may be) and the Technically Evaluated Entity and / or Financially Evaluated Entity (as the case may be) shall be under the direct control or indirectly under the common control of such entity;

1.2 Interpretation:

Save where the contrary is indicated, any reference in this Agreement to:

"Agreement" shall be construed as including a reference to its Schedules, Appendices and Annexures;

"Rupee", **"Rupees"** and **"Rs."** shall denote lawful currency of India;

"crore" shall mean a reference to ten million (10,000,000) and a **"lakh"** shall mean a reference to one tenth of a million (1,00,000);

"encumbrance" shall be construed as a reference to a mortgage, charge, pledge, lien or other encumbrance securing any obligation of any person or any other type of preferential arrangement (including, without limitation, title transfer and retention arrangements) having a similar effect;

"holding company" of a company or corporation shall be construed as a reference to any company or corporation of which the other company or corporation is a subsidiary;

"indebtedness" shall be construed so as to include any obligation (whether incurred as principal or surety) for the payment or repayment of money, whether present or future, actual or contingent;

"person" shall have the meaning as defined in Section 2 (49) of the Act;

"subsidiary" of a company or corporation (the holding company) shall be construed as a reference to any company or corporation:

(i) which is controlled, directly or indirectly, by the holding company, or

(ii) more than half of the issued share capital of which is beneficially owned, directly or indirectly, by the holding company, or

(iii) which is a subsidiary of another subsidiary of the holding company,

for these purposes, a company or corporation shall be treated as being controlled by another if that other company or corporation is able to direct its affairs and/or to control the composition of its board of directors or equivalent body;

"winding-up", **"dissolution"**, **"insolvency"**, or **"reorganization"** in the context of a company or corporation shall have the same meaning as defined in the Companies Act, 1956/ Companies Act, 2013 (as the case may be).

1.2.1 Words importing the singular shall include the plural and vice versa.

1.2.2 This Agreement itself or any other agreement or document shall be construed as a reference to this or to such other agreement or document as it may have been, or may from time to time be, amended, varied, novated, replaced or supplemented.

1.2.3 A Law shall be construed as a reference to such Law including its amendments or re-enactments from time to time.

1.2.4 A time of day shall, save as otherwise provided in any agreement or document be construed as a reference to Indian Standard Time.

1.2.5 Different parts of this Agreement are to be taken as mutually explanatory and supplementary to each other and if there is any inconsistency between or among the parts of this Agreement, they shall be interpreted in a harmonious manner so as to give effect to each part.

1.2.6 The tables of contents and any headings or sub-headings in this Agreement have been inserted for ease of reference only and shall not affect the interpretation of this Agreement.

1.2.7 All interest payable under this Agreement shall accrue from day to day and be calculated on the basis of a year of three hundred and sixty five (365) days.

1.2.8 The words “hereof” or “herein”, if and when used in this Agreement shall mean a reference to this Agreement.

1.2.9 The contents of Schedule 7 shall be referred to for ascertaining accuracy and correctness of the representations made by the Selected Bidder in Article 17.2.1 hereof.

ARTICLE: 2

2. EFFECTIVENESS AND TERM OF AGREEMENT

2.1 Effective Date:

This Agreement shall be effective from later of the dates of the following events:

a. The Selected Bidder, on behalf of the TSP, has provided the Contract Performance Guarantee, as per terms of Article 3.1 of this Agreement; and

b. The Selected Bidder has acquired for the Acquisition Price, one hundred percent (100%) of the equity shareholding of **PFC Consulting Limited** in **{SPV UNDER INCORPORATION}** along with all its related assets and liabilities as per the provisions of the Share Purchase Agreement. and

c. The Agreement is executed and delivered by the Parties;

2.2 Term and Termination:

2.2.1 Subject to Article 2.2.3 and Article 2.4, this Agreement shall continue to be effective in relation to the Project until the Expiry Date, when it shall automatically terminate.

2.2.2 Post the Expiry Date of this Agreement, the TSP shall ensure transfer of Project Assets to CTU or its successors or an agency as decided by the Central Government at zero cost and free from any encumbrance and liability. The transfer shall be completed within 90 days of expiry of this Agreement failing which CTU shall be entitled to take over the Project Assets Suo moto.

2.2.3 This Agreement shall terminate before the Expiry Date in accordance with Article 13 or Article 3.3.2 or Article 3.3.4.

2.3 Conditions prior to the expiry of the Transmission License

In order to continue the Project beyond the expiry of the Transmission License, the TSP shall be obligated to make an application to the Commission at least two (2) years before the date of expiry of the Transmission License, seeking the Commission's approval for the extension of the term of the Transmission License up to the Expiry Date.

2.3.1 The TSP shall timely comply with all the requirements that may be laid down by the Commission for extension of the term of the Transmission License beyond the initial term of twenty-five (25) years & upto the Expiry Date and the TSP shall keep the Nodal Agency fully informed about the progress on its application for extension of the term of the Transmission License.

2.4 Survival:

The expiry or termination of this Agreement shall not affect any accrued rights, obligations/ roles and liabilities of the Parties under this Agreement, including the right to receive liquidated damages as per the terms of this Agreement, nor shall it effect the survival of any continuing obligations/ roles for which this Agreement provides, either expressly or by necessary implication, which are to survive after the Expiry Date or termination including those under Articles 3.3.3, 3.3.5, Article 9.3 (Application of Insurance Proceeds), Article 11 (Force Majeure), Article 13 (Events of Default and Termination), Article 14 (Liability & Indemnification), Article 16 (Governing Law & Dispute Resolution), Article 19 (Miscellaneous).

2.5 Applicability of the provisions of this Agreement

2.5.1 For the purpose of Availability, Target Availability and the computation of Availability, Incentive, Penalty, the provisions provided in this Agreement shall apply and any future modifications in the relevant Rules and Regulations shall not be applicable for this Project.

2.5.2 For the purposes of this Agreement for ISTS systems developed under the tariff based competitive bidding framework, the provisions relating to the definitions (Availability and COD), Article 3 (Contract Performance Guarantee and Conditions Subsequent), Article 5 (Construction of the Project), Article 6 (Connection and Commissioning of the Project), Article 8 (Target Availability and calculation of Availability), Article 11 (Force Majeure), Article 12 (Change in Law), Article 13 (Event of Default), Article 14 (Indemnification), Article 15 (Assignment and Charges), Articles 16.1, 16.2 and 16.4 (Governing Laws and Dispute Resolution) and Article 17 (representation and warranties of the ISTS Licensee) of this agreement shall supersede the corresponding provisions under Sharing Regulations.

ARTICLE: 3

3. CONDITIONS SUBSEQUENT

3.1 Satisfaction of conditions subsequent by the TSP

3.1.1 Within ten (10) days from the date of issue of Letter of Intent, the Selected Bidder, shall:

a. Provide the Contract Performance Guarantee, and

b. Acquire, for the Acquisition Price, one hundred percent (100%) equity shareholding of **{SPV UNDER INCORPORATION}** from **PFC Consulting Limited**, who shall sell to the Selected Bidder, the equity shareholding of **{SPV UNDER INCORPORATION},** along with all its related assets and liabilities.

c. Execute this Agreement;

The TSP shall, within five (5) working days from the date of acquisition of SPV by the Selected Bidder, undertake to apply to the Commission for the grant of Transmission License and for the adoption of tariff as required under section-63 of the Electricity Act.

The Selected Bidder, on behalf of the TSP, will provide to the **Central Transmission Utility of India Limited** (being the Nodal Agency) the Contract Performance Guarantee for an amount of **Rs.55.00 Crore (Rupees Fifty Five Crore Only).**

3.1.2 The Contract Performance Guarantee shall be initially valid for a period up to three (3) months after the Scheduled COD of the Project and shall be extended from time to time to be valid for a period up to three (3) months after the COD of the Project. In case the validity of the Contract Performance Guarantee is expiring before the validity specified in this Article, the TSP shall, at least thirty (30) days before the expiry of the Contract Performance Guarantee, replace the Contract Performance Guarantee with another Contract Performance Guarantee or extend the validity of the existing Contract Performance Guarantee until the validity period specified in this Article.

3.1.3 The TSP agrees and undertakes to duly perform and complete the following activities within six (6) months from the Effective Date (except for c) below), unless such completion is affected due to any Force Majeure Event, or if any of the activities is specifically waived in writing by the Nodal Agency:

a. To obtain the Transmission License for the Project from the Commission;

b. To obtain the order for adoption of Transmission Charges by the

Commission, as required under Section 63 of the Electricity Act 2003;

c. To submit to the Nodal Agency, CEA & Independent Engineer, the Project Execution Plan, immediately after award of contract(s) and maximum within one hundred and twenty (120) days from the Effective Date. Also, an approved copy each of Manufacturing Quality Plan (MQP) and Field Quality Plan (FQP) would be submitted to Independent Engineer & Nodal Agency in the same time period. The TSP's Project Execution Plan should be in conformity with the Scheduled COD as specified in Schedule 2 of this Agreement, and shall bring out clearly the organization structure, time plan and methodology for executing the Project, award of major contracts, designing, engineering, procurement, shipping, construction, testing and commissioning to commercial operation;

d. To submit to the Nodal Agency, CEA & Independent Engineer a detailed bar (GANTT) chart of the Project outlining each activity (taking longer than one Month), linkages as well as durations;

e. To submit to the Nodal Agency, CEA & Independent Engineer detailed specifications of conductor meeting the functional specifications specified in RFP;

f. To achieve Financial Closure;

g. To provide an irrevocable letter to the Lenders duly accepting and acknowledging the rights provided to the Lenders under the provisions of Article 15.3 of this Agreement and all other RFP Project Documents;

h. To award the Engineering, Procurement and Construction contract ("EPC contract") for the design and construction of the Project and shall have given to such Contractor an irrevocable notice to proceed; and

i. To sign the Agreement(s) required, if any, under Sharing Regulations.

3.2 Recognition of Lenders' Rights by the Nodal Agency

3.2.1 The Nodal Agency hereby accepts and acknowledges the rights provided to the Lenders as per Article 15.3 of this Agreement and all other RFP Project Documents.

3.3 Consequences of non-fulfilment of conditions subsequent

3.3.1 If any of the conditions specified in Article 3.1.3 is not duly fulfilled by the TSP even within three (3) Months after the time specified therein, then on and from the expiry of such period and until the TSP has satisfied all the conditions specified in Article 3.1.3, the TSP shall, on a monthly basis, be liable to furnish to **Central Transmission Utility of India Limited (being the Nodal Agency)** additional Contract Performance Guarantee of **Rs.5.50 Crore (Rupees Five Crore**

Fifty Lakh Only) within two (2) Business Days of expiry of every such Month. Such additional Contract Performance Guarantee shall be provided to **Central Transmission Utility of India Limited (being the Nodal Agency)** in the manner provided in Article 3.1.1 and shall become part of the Contract Performance Guarantee and all the provisions of this Agreement shall be construed accordingly. **Central Transmission Utility of India Limited (being the Nodal Agency)** shall be entitled to hold and / or invoke the Contract Performance Guarantee, including such additional Contract Performance Guarantee, in accordance with the provisions of this Agreement.

3.3.2 Subject to Article 3.3.4, if:

(i) the fulfilment of any of the conditions specified in Article 3.1.3 is delayed beyond nine (9) Months from the Effective Date and the TSP fails to furnish additional Contract Performance Guarantee to the Nodal Agency in accordance with Article 3.3.1 hereof; or

(ii) the TSP furnishes additional Performance Guarantee to the Nodal Agency in accordance with Article 3.3.1 hereof but fails to fulfil the conditions specified in Article 3.1.3 within a period of twelve (12) months from the Effective Date,

the Nodal Agency shall have the right to terminate this Agreement, by giving a Termination Notice to the TSP, in writing, of at least seven (7) days, with a copy to CEA and the Lenders' Representative in order to enable the Lenders to exercise right of substitution in accordance with Article 15.3 of this Agreement.

3.3.3 If the Nodal Agency elects to terminate this Agreement as per the provisions of Article 3.3.2, the TSP shall be liable to pay to the Nodal Agency an amount of **Rs.55.00 Crore (Rupees Fifty Five Crore Only)** as liquidated damages. The Nodal Agency shall be entitled to recover this amount of damages by invoking the Contract Performance Guarantee to the extent of liquidated damages, which shall be required by the Nodal Agency, and the balance shall be returned to TSP, if any.

It is clarified for removal of doubt that this Article shall survive the termination of this Agreement.

3.3.4 In case of inability of the TSP to fulfil the conditions specified in Article 3.1.3 due to any Force Majeure Event, the time period for fulfilment of the condition subsequent as mentioned in Article 3.1.3, may be extended for a period of such Force Majeure Event. Alternatively, if deemed necessary, this Agreement may be terminated by the Nodal Agency by giving a Termination Notice to the TSP, in writing, of at least seven (7) days, with a copy to CEA and the Lenders' Representative in order to enable the Lenders to exercise right of substitution in accordance with Article 15.3 of this Agreement and the Contract Performance Guarantee shall be returned as per the provisions of Article 6.5.1.

Provided, that due to the provisions of this Article 3.3.4, any increase in the time period for completion of conditions subsequent mentioned under Article 3.1.3, shall lead to an equal increase in the time period for the Scheduled COD. If the Scheduled

COD is extended beyond a period of one hundred eighty (180) days due to the provisions of this Article 3.3.4, the TSP will be allowed to recover the interest cost during construction corresponding to the period exceeding one hundred eighty (180) days by adjustment in the Transmission Charges in accordance with Schedule 9.

3.3.5 Upon termination of this Agreement as per Articles 3.3.2 and 3.3.4, the Nodal Agency may take steps to bid out the Project again.

3.3.6 The Nodal agency, on the failure of the TSP to fulfil its obligations, if it considers that there are sufficient grounds for so doing, apart from invoking the Contract Performance Guarantee under para 3.3.3 may also initiate proceedings for blacklisting the TSP as per provisions of Article 13.2 of TSA.

3.4 Progress Reports

The TSP shall notify the Nodal Agency and CEA in writing at least once a Month on the progress made in satisfying the conditions subsequent in Articles 3.1.3.

ARTICLE: 4

4. DEVELOPMENT OF THE PROJECT

4.1 TSP's obligations in development of the Project:

Subject to the terms and conditions of this Agreement, the TSP at its own cost and expense shall observe, comply with, perform, undertake and be responsible:

a. for procuring and maintaining in full force and effect all Consents, Clearances and Permits, required in accordance with Law for development of the Project;

b. for financing, constructing, owning and commissioning each of the Element of the Project for the scope of work set out in Schedule 1 of this Agreement in accordance with:

i. the Electricity Act and the Rules made thereof;

ii. the Grid Code;

iii. the CEA Regulations applicable, and as amended from time to time, for Transmission Lines and sub-stations:

- the Central Electricity Authority (Technical Standards for Connectivity to the Grid) Regulations, 2007;
- Central Electricity Authority (Technical Standards for construction of Electrical Plants and Electric Lines) Regulation, 2010;
- Central Electricity Authority (Grid Standard) Regulations, 2010;
- Central Electricity Authority (Safety requirements for construction, operation and maintenance of Electrical Plants and Electrical Lines) Regulation, 2011;
- Central Electricity Authority (Measures relating to Safety and Electricity Supply) Regulation, 2010;
- Central Electricity Authority (Technical Standards for Communication System in Power System Operation) Regulations, 2020.

iv. Safety/ security Guidelines laid down by the Government;

v. Prudent Utility Practices, relevant Indian Standards and the Law;

not later than the Scheduled COD as per Schedule 2 of this Agreement;

c. for entering into a Connection Agreement with the concerned parties in accordance with the Grid Code.

d. for owning the Project throughout the term of this Agreement free and clear of any encumbrances except those expressly permitted under Article 15 of this Agreement;

e. to co-ordinate and liaise with concerned agencies and provide on a timely basis relevant information with regard to the specifications of the Project that may be required for interconnecting the Project with the Interconnection Facilities;

f. for providing all assistance to the Arbitrators as they may require for the performance of their duties and responsibilities;

g. to provide to the Nodal Agency and CEA, on a monthly basis, progress reports with regard to the Project and its execution (in accordance with prescribed form) to enable the CEA to monitor and co-ordinate the development of the Project matching with the Interconnection Facilities;

h. to comply with Ministry of Power Orders No. P45021/2/2017-PP (BE-II)-Part (4) Vol.II dated 19.07.2024 as well as other Guidelines issued by Govt. of India pertaining to this;

i. to procure the products associated with the Transmission System as per provisions of Public Procurement (Preference to Make in India) orders issued by Ministry of Power vide orders No. P45021/2/2017-PP (BE-II)-Part (4) Vol.II dated 19.07.2024 for transmission sector, as amended from time to time read with Department for Promotion of Industry and Internal Trade (DPIIT) orders in this regard (Procuring Entity as defined in above orders shall deemed to have included Selected Bidder and/ or TSP).

   Also, to comply with Department of Expenditure, Ministry of Finance vide OM No. F.7/10/2021-PPD (1) dated 23.02.2023, as amended from time to time, regarding public procurement from a bidder of a country, which shares land border with India;

j. to submit to Nodal Agency information in the prescribed format [To be devised by Nodal Agency] for ensuring compliance to Article 4.1 i) above.

k. to comply with all its obligations undertaken in this Agreement.

4.2 Roles of the Nodal Agency in implementation of the Project:

4.2.1 Subject to the terms and conditions of this Agreement, the Nodal Agency shall be the holder and administrator of this Agreement and shall inter alia:

a. appoint an Independent Engineer within 90 days of the Effective Date

b. provide letters of recommendation to the concerned Indian Governmental Instrumentality, as may be requested by the TSP from time to time, for obtaining the Consents, Clearances and Permits required for the Project;

c. coordinate among TSP and upstream/downstream entities in respect of Interconnection Facilities; and

d. monitor the implementation of the Agreement and take appropriate action for breach thereof including revocation of guarantees, cancellation of Agreement, blacklisting etc

e. provide all assistance to the Arbitrators as required for the performance of their duties and responsibilities; and

f. perform any other responsibility (ies) as specified in this Agreement.

4.3 Time for Commencement and Completion:

a. The TSP shall take all necessary steps to commence work on the Project from the Effective Date of the Agreement and shall achieve Scheduled COD of the Project in accordance with the time schedule specified in Schedule 2 of this Agreement;

b. The COD of each Element of the Project shall occur no later than the Scheduled COD or within such extended time to which the TSP shall be entitled under Article 4.4 hereto.

4.4 Extension of time:

4.4.1 In the event that the TSP is unable to perform its obligations for the reasons solely attributable to the Nodal Agency, the Scheduled COD shall be extended, by a 'day to day' basis, subject to the provisions of Article 13.

4.4.2 In the event that an Element or the Project cannot be commissioned by its Scheduled COD on account of any Force Majeure Event as per Article 11, the Scheduled COD shall be extended, by a 'day to day' basis for a period of such Force Majeure Event. Alternatively, if deemed necessary, the Nodal Agency may terminate the Agreement as per the provisions of Article 13.4 by giving a Termination Notice to the TSP, in writing, of at least seven (7) days, with a copy to CEA and the Lenders' Representative in order to enable the Lenders to exercise right of substitution in accordance with Article 15.3 of this Agreement.

4.4.3 If the Parties have not agreed, within thirty (30) days after the affected Party's performance has ceased to be affected by the relevant circumstance, on how long the Scheduled COD should be deferred by, any Party may raise the Dispute to be resolved in accordance with Article 16.

4.5 Metering Arrangements:

4.5.1 The TSP shall comply with all the provisions of the IEGC and the Central Electricity Authority (Installation and Operation of Meters) Regulations, 2006 as amended from time to time, with regard to the metering arrangements for the Project. The TSP shall fully cooperate with the CTU / STU / RLDC and extend all necessary assistance in taking meter readings.

4.6 Interconnection Facilities:

4.6.1 Subject to the terms and conditions of this Agreement, the TSP shall be responsible for connecting the Project with the interconnection point(s) specified in Schedule 1 of this Agreement. The Interconnection Facilities shall be developed as per the scope of work and responsibilities assigned in Schedule 1 of this Agreement. The Nodal Agency shall be responsible for coordinating to make available the Interconnection Facilities.

4.6.2 In order to remove any doubts, it is made clear that the obligation of the TSP within the scope of the project is to construct the Project as per Schedule-1 of this Agreement and in particular to connect it to the Interconnection Facilities as specified in this Agreement.

ARTICLE: 5

5. CONSTRUCTION OF THE PROJECT

5.1 TSP's Construction Responsibilities:

5.1.1 The TSP, at its own cost and expense, shall be responsible for designing, constructing, erecting, testing and commissioning each Element of the Project by the Scheduled COD in accordance with the Regulations and other applicable Laws specified in Article 4.1 of this Agreement.

5.1.2 The TSP acknowledges and agrees that it shall not be relieved from any of its obligations under this Agreement or be entitled to any extension of time or any compensation whatsoever by reason of the unsuitability of the Site or Transmission Line route(s).

5.1.3 The TSP shall be responsible for obtaining all Consents, Clearances and Permits related but not limited to road / rail / river / canal / power line / crossings, Power and Telecom Coordination Committee (PTCC), defence, civil aviation, right of way / way-leaves and environmental & forest clearances from relevant authorities required for developing, financing, constructing, maintaining/ renewing all such Consents, Clearances and Permits in order to carry out its obligations under this Agreement in general and shall furnish to the Nodal Agency such copy/ies of each Consents, Clearances and Permits, on demand. Nodal Agency shall provide letters of recommendation to the concerned Indian Governmental Instrumentality, as may be requested by the TSP from time to time, for obtaining the Consents, Clearances and Permits required for the Project.

5.1.4 The TSP shall be responsible for:

a) Acquisition of land for location specific substations, switching stations or HVDC terminal or inverter stations. Also, the actual location of Greenfield substations (Switching Stations or HVDC Terminal or Inverter Stations) in the scope of TSP:
   - For Generation Pooling Substation shall not be beyond 3 Km radius of the location proposed by BPC in their survey report.
   - For Load Serving Substation within the scope of TSP shall not be beyond 5 Km radius of the location proposed by the BPC in their Survey Report
   - For an Intermediate Substation shall not be beyond 10 Km radius of the location proposed by the BPC in their Survey Report.

b) final selection of Site including its geo-technical investigation

c) Survey and geo-technical investigation of line route in order to determine the final route of the Transmission Lines;

d) Seeking access to the Site and other places where the Project is being executed, at its own risk and costs, including payment of any crop, tree compensation or any other compensation as may be required.

5.1.5 In case the Project involves any resettlement and rehabilitation, the resettlement and rehabilitation package will be implemented by the State Government authorities, for which the costs is to be borne by the TSP and no changes would be allowed in the Transmission Charges on account of any variation in the resettlement and rehabilitation cost. The TSP shall provide assistance on best endeavour basis, in implementation of the resettlement and rehabilitation package, if execution of such package is in the interest of expeditious implementation of the Project and is beneficial to the Project affected persons.

5.2 Appointing Contractors:

5.2.1 The TSP shall conform to the requirements as provided in this Agreement while appointing Contractor(s) for procurement of goods & services.

5.2.2 The appointment of such Contractor(s) shall neither relieve the TSP of any of its obligations under this Agreement nor make the Nodal Agency liable for the performance of such Contractor(s).

5.3 Monthly Progress Reporting:

The TSP shall provide to the CEA, Nodal Agency & Independent Engineer, on a monthly basis, progress reports along with likely completion date of each Element with regard to the Project and its execution (in accordance with prescribed form). The Nodal Agency/ CEA shall monitor the development of the Project for its timely completion for improving and augmenting the electricity system as a part of its statutory responsibility.

5.4 Quality of Workmanship:

The TSP shall ensure that the Project is designed, built and completed in a good workmanship using sound engineering and construction practices, and using only materials and equipment that are new and manufactured as per the MQP and following approved FQP for erection, testing & commissioning and complying with Indian /International Standards such that, the useful life of the Project will be at least thirty five (35) years from the COD of the Project.

The TSP shall ensure that all major substation equipment / component (e.g. transformers, reactors, Circuit Breakers, Instrument Transformers (IT), Surge Arresters (SA), Protection relays, clamps & connectors etc.), equipment in terminal stations of HVDC installations including Thyristor/ IGBT valves, Converter Transformers, smoothing reactors, Transformer bushings and wall bushings, GIS bus

ducts, towers and gantry structures and transmission towers or poles and line materials (conductors, earthwire, OPGW, insulator, accessories for conductors, OPGW & earthwires, hardware fittings for insulators, aviation lights etc), facilities and system shall be designed, constructed and tested (Type test, Routine tests, Factory Acceptance Test (FAT)) in accordance with relevant CEA Regulations and Indian Standards. In case Indian Standards for any particular equipment/ system/ process is not available, IEC/ IEEE or equivalent International Standards and Codes shall be followed.

5.5 Progress Monitoring & Quality Assurance:

5.5.1 The Project Execution Plan submitted by the TSP in accordance with Article 3.1.3 c) shall comprise of detailed schedule of all the equipment/items /materials required for the Project, right from procurement of raw material till the dispatch from works and receipt at the site. Further, it should also include various stages of the construction schedule up to the commissioning of the Project.

5.5.2 Nodal Agency, CEA & Independent Engineer shall have access at all reasonable times to the Site and to the Manufacturer's works and to all such places where the Project is being executed.

5.5.3 Independent Engineer shall ensure conformity of the conductor specifications with the functional specifications specified in RFP.

5.5.4 The Independent Engineer shall monitor the following during construction of the Project:

a) Quality of equipment, material, foundation, structures and workmanship etc. as laid down in Article 5.4 and 6.1.4 of the TSA. Specifically, quality of Sub-station equipment, transmission line material and workmanship etc. would be checked in accordance with the Article 5.4.

b) Progress in the activities specified in Condition Subsequent

c) Verification of readiness of the elements including the statutory clearances & completion of civil works, fixing of all components and finalisation of punch points (if any) prior to charging of the elements

d) Progress of construction of substation and Transmission Lines

5.5.5 The progress shall be reviewed by the Independent Engineer against the Project Execution Plan. The Independent Engineer shall prepare its report on monthly basis and submit the same to Nodal Agency highlighting the progress achieved till the end of respective month vis-à-vis milestone activities, areas of concern, if any, which may result in delay in the timely completion of the Project. Based on the progress, Nodal

Agency and/ or CEA shall issue written instructions to the TSP to take corrective measures, as may be prudent for the timely completion of the Project. In case of any deficiency, the Nodal Agency would be at liberty to take action in accordance with the procedure of this Agreement.

5.5.6 For any delay in commissioning any critical Element(s), as identified in Schedule 1 & Schedule 2 of this Agreement, beyond a period of 45 days shall lead to a sequestration of 10% of the Contract Performance Guarantee.

5.6 Site regulations and Construction Documents

The TSP shall abide by the Safety Rules and Procedures as mentioned in Schedule 3 of this Agreement

The TSP shall retain at the Site and make available for inspection at all reasonable times, copies of the Consents, Clearances and Permits, construction drawings and other documents related to construction.

5.7 Supervision of work:

The TSP shall provide all necessary superintendence for execution of the Project and its supervisory personnel shall be available to provide full-time superintendence for execution of the Project. The TSP shall provide skilled personnel who are experienced in their respective fields.

5.8 Remedial Measures:

The TSP shall take all necessary actions for remedying the shortfall in achievement of timely progress in execution of the Project, if any, as intimated by the Independent Engineer and/ or CEA and/ or the Nodal Agency. However, such intimation by the Independent Engineer and/ or CEA and/ or the Nodal Agency and the subsequent effect of such remedial measures carried out by the TSP shall not relieve the TSP of its obligations in the Agreement. Independent Engineer and/ or CEA and/ or the Nodal Agency may carry out random inspections during the Project execution, as and when deemed necessary by it. If the shortfalls as intimated to the TSP are not remedied to the satisfaction of the CEA and/ or the Nodal Agency, this Agreement may be terminated by the Nodal Agency by giving a Termination Notice to the TSP, in writing, of at least seven (7) days, with a copy to CEA and the Lenders' Representative in order to enable the Lenders to exercise right of substitution in accordance with Article 15.3 of this Agreement.

ARTICLE: 6

6. CONNECTION AND COMMISSIONING OF THE PROJECT

6.1 Connection with the Inter-Connection Facilities:

6.1.1 The TSP shall give the RLDC(s), CTU, / STU, as the case may be, and any other agencies as required, at least sixty (60) days advance written notice of the date on which it intends to connect an Element of the Project, which date shall not be earlier than its Scheduled COD or Schedule COD extended as per Article 4.4.1 & 4.4.2 of this Agreement, unless mutually agreed to by Parties. Further, any preponing of COD of any element prior to Scheduled COD must be approved by the Nodal Agency.

6.1.2 The RLDC / SLDC (as the case may be) or the CTU / STU (as the case may be), for reasonable cause, including non-availability of Interconnection Facilities as per Article 4.2, can defer the connection for up to fifteen (15) days from the date notified by the TSP pursuant to Article 6.1.1, if it notifies to the TSP in writing, before the date of connection, of the reason for the deferral and when the connection is to be rescheduled. However, no such deferment on one or more occasions would be for more than an aggregate period of thirty (30) days. Further, the Scheduled COD would be extended as required, for all such deferments on “day to day” basis.

6.1.3 Subject to Articles 6.1.1 and 6.1.2, any Element of Project may be connected with the Interconnection Facilities when:

a. it has been completed in accordance with this Agreement and the Connection Agreement;
b. it meets the Grid Code, Central Electricity Authority (Technical Standards for Connectivity to the Grid) Regulations, 2007 as amended from time to time and all other Indian legal requirements, and
c. The TSP has obtained the approval in writing of the Electrical Inspector certifying that the Element is ready from the point of view of safety of supply and can be connected with the Interconnection Facilities.
d. It has satisfactorily met all the testing requirements as per Articles 6.1.4.

6.1.4 Site Acceptance Test (SAT)/ pre-commissioning tests of all major substation equipment, component, system, facilities shall be successfully carried out before commissioning. The Type tests, FAT and SAT reports should be available at the substation / terminal station of HVDC installations for ready reference of operation and maintenance staff and has to be made available to the Independent Engineer

appointed for quality monitoring or their authorised representatives, as and when they wish to examine the same.

6.2 Commercial Operation:

6.2.1 An Element of the Project shall be declared to have achieved COD twenty four (24) hours following the connection of the Element with the Interconnection Facilities pursuant to Article 6.1 or seven (7) days after the date on which it is declared by the TSP to be ready for charging but is not able to be charged for reasons not attributable to the TSP subject to Article 6.1.2.

Provided that an Element shall be declared to have achieved COD only after all the Element(s), if any, which are pre-required to have achieved COD as defined in Schedule 2 of this Agreement, have been declared to have achieved their respective COD.

6.2.2 Once any Element of the Project has been declared to have achieved deemed COD as per Article 6.2.1 above, such Element of the Project shall be deemed to have Availability equal to the Target Availability till the actual charging of the Element and to this extent, TSP shall be eligible for the Monthly Transmission Charges applicable for such Element.

6.3 Compensation for Direct Non Natural Force Majeure Event or Indirect Non Natural Force Majeure Event or Natural Force Majeure Event (affecting the Nodal Agency)

6.3.1 If the TSP is otherwise ready to connect the Element(s) of the Project and has given due notice, as per provisions of Article 6.1.1, to the concerned agencies of the date of intention to connect the Element(s) of the Project, where such date is not before the Scheduled COD, but is not able to connect the Element(s) of the Project by the said date specified in the notice, due to Direct Non Natural Force Majeure Event or Indirect Non Natural Force Majeure Event or Natural Force Majeure Event affecting the Nodal Agency, provided such Direct Non Natural Force Majeure Event or Indirect Non Natural Force Majeure Event or Natural Force Majeure Event affecting the Nodal Agency has continued for a period of more than three (3) continuous or non-continuous Months, the TSP shall, until the effects of the Direct Non Natural Force Majeure Event or of Indirect Non Natural Force Majeure Event or Natural Force Majeure Event affecting the Nodal Agency no longer prevent the TSP from connecting the Element(s) of the Project, be deemed to have achieved COD relevant to that date and to this extent, be deemed to have been providing Transmission Service with effect from the date notified, and shall be treated as follows:

a. In case of delay due to Direct Non Natural Force Majeure Event, TSP is entitled for Transmission Charges calculated on Target Availability for the period of such events in excess of three (3) continuous or non-continuous

Months in the manner provided in (c) below.

b. In case of delay due to Indirect Non Natural Force Majeure Event or Natural Force Majeure Event affecting the Nodal Agency, TSP is entitled for payment for debt service which is due under the Financing Agreements, subject to a maximum of Transmission Charges calculated on Target Availability, for the period of such events in excess of three (3) continuous or non-continuous Months in the manner provided in (c) below.

c. In case of delay due to Direct Non Natural Force Majeure Event or Indirect Non Natural Force Majeure Event or Natural Force Majeure Event affecting the Nodal Agency, the TSP is entitled for payments mentioned in (a) and (b) above, after commencement of Transmission Service, in the form of an increase in Transmission Charges. These amounts shall be paid from the date, being the later of a) the date of cessation of such Indirect Non Natural Force Majeure Event or Natural Force Majeure Event affecting the Nodal Agency and b) the completion of sixty (60) days from the receipt of the Financing Agreements by the Nodal Agency from the TSP.

Provided such increase in Transmission Charges shall be so as to put the TSP in the same economic position as the TSP would have been in case the TSP had been paid amounts mentioned in (a) and (b) above in a situation where the Force Majeure Event had not occurred.

For the avoidance of doubt, it is clarified that the charges payable under this Article 6.3.1 shall be recovered as per Sharing Regulations.

6.4 Liquidated Damages for Delay in achieving COD of Project:

6.4.1 If the TSP fails to achieve COD of any Element of the Project or the Project, by the Element's / Project's Scheduled COD or such Scheduled COD as extended under Articles 4.4.1 and 4.4.3, then the TSP shall pay to the Nodal Agency, a sum equivalent to 3.33% of Monthly Transmission Charges applicable for the Element of the Project [in case where no Elements have been defined, to be on the Project as a whole] / Project, for each day of delay up to sixty (60) days of delay and beyond that time limit, at the rate of five percent (5%) of the Monthly Transmission Charges applicable to such Element / Project, as liquidated damages for such delay and not

as penalty, without prejudice to any rights of the Nodal Agency under the Agreement.

6.4.2 The TSP's maximum liability under this Article 6.4 shall be limited to the amount of liquidated damages calculated in accordance with Article 6.4.1 for and up to six (6) months of delay for the Element or the Project.

Provided that, in case of failure of the TSP to achieve COD of the Element of the Project even after the expiry of six (6) months from its Scheduled COD, the provisions of Article 13 shall apply.

6.4.3 The TSP shall make payment to the Nodal Agency of the liquidated damages calculated pursuant to Article 6.4.1 within ten (10) days of the earlier of:

a. the date on which the applicable Element achieves COD; or

b. the date of termination of this Agreement.

The payment of such damages shall not relieve the TSP from its obligations to complete the Project or from any other obligation and liabilities under the Agreement.

6.4.4 If the TSP fails to pay the amount of liquidated damages to the Nodal Agency within the said period of ten (10) days, the Nodal Agency shall be entitled to recover the said amount of the liquidated damages by invoking the Contract Performance Guarantee. If the then existing Contract Performance Guarantee is for an amount which is less than the amount of the liquidated damages payable by the TSP to the Nodal Agency under this Article 6.3 and the TSP fails to make payment of the balance amount of the liquidated damages not covered by the Contract Performance Guarantee, then such balance amount shall be deducted from the Transmission Charges payable to the TSP. The right of the Nodal Agency to encash the Contract Performance Guarantee is without prejudice to the other rights of the Nodal Agency under this Agreement.

6.4.5 For avoidance of doubt, it is clarified that amount payable by TSP under this Article is over and above the penalty payable by TSP under Article 5.5.6 of this Agreement.

6.5 Return of Contract Performance Guarantee

6.5.1 The Contract Performance Guarantee as submitted by TSP in accordance with Article 3.1.1 shall be released by the Nodal Agency within three (3) months from the COD of the Project. In the event of delay in achieving Scheduled COD of any of the Elements by the TSP (otherwise than due to reasons as mentioned in Article 3.1.3 or Article 11) and consequent part invocation of the Contract Performance Guarantee by the Nodal Agency, Nodal Agency shall release the Contract Performance

Guarantee, if any remaining unadjusted, after the satisfactory completion by the TSP of all the requirements regarding achieving the Scheduled COD of the remaining Elements of the Project. It is clarified that the Nodal Agency shall also return / release the Contract Performance Guarantee in the event of (i) applicability of Article 3.3.2 to the extent the Contract Performance Guarantee is valid for an amount in excess of **Rs.55.00 Crore (Rupees Fifty Five Crore Only),** or (ii) termination of this Agreement by the Nodal Agency as mentioned under Article 3.3.4 of this Agreement.

6.5.2 The release of the Contract Performance Guarantee shall be without prejudice to other rights of the Nodal Agency under this Agreement.

ARTICLE: 7

7. OPERATION AND MAINTENANCE OF THE PROJECT

7.1 Operation and Maintenance of the Project:

The TSP shall be responsible for ensuring that the Project is operated and maintained in accordance with the regulations made by the Commission and CEA from time to time and provisions of the Act.

ARTICLE: 8

8. AVAILABILITY OF THE PROJECT

8.1 Calculation of Availability of the Project:

Calculation of Availability for the Elements and for the Project, as the case may be, shall be as per **Appendix –IV to Central Electricity Regulatory Commission (Terms and Conditions of Tariff) Regulations, 2024**, as applicable on the Bid Deadline and as appended in Schedule 6 of this Agreement.

8.2 Target Availability:

The Target Availability of each Element and the Project shall be **98%.**

Payment of monthly Transmission charges based on actual availability will be calculated as per para 1.2 of Schedule 4 of this Agreement.

If the availability of any Element or the Project is below the Target Availability, for six consecutive months in a Contract Year, the DIC(s) or the Nodal Agency may issue a show cause notice to the TSP, asking them to show cause as to why the Transmission Service Agreement be not terminated, and if no satisfactory cause is shown it may terminate the Agreement. If the Nodal Agency is of the opinion that the transmission system is of critical importance, it may carry out or cause to carry the operation and maintenance of transmission system at the risk and cost of TSP.

ARTICLE: 9

9. INSURANCES

9.1 Insurance:

9.1.1 The TSP shall effect and maintain or cause to be effected and maintained during the Construction Period and the Operating Period, adequate Insurances against such risks, with such deductibles including but not limited to any third party liability and endorsements and co-beneficiary/insured, as may be necessary under

a. any of the Financing Agreements,

b. the Laws, and

c. in accordance with Prudent Utility Practices.

The Insurances shall be taken effective from a date prior to the date of the Financial Closure till the Expiry Date.

9.2 Evidence of Insurance cover:

9.2.1 The TSP shall furnish to the Nodal Agency copies of certificates and policies of the Insurances, as and when the Nodal Agency may seek from the TSP as per the terms of Article 9.1

9.3 Application of Insurance Proceeds:

9.3.1 Save as expressly provided in this Agreement, the policies of Insurances and the Financing Agreements, the proceeds of any insurance claim made due to loss or damage to the Project or any part of the Project shall be first applied to reinstatement, replacement or renewal of such loss or damage.

9.3.2 If a Natural Force Majeure Event renders the Project no longer economically and technically viable and the insurers under the Insurances make payment on a “total loss” or equivalent basis, the portion of the proceeds of such Insurance available to the TSP (after making admissible payments to the Lenders as per the Financing Agreements) shall be allocated only to the TSP. Nodal Agency and / or concerned Designated ISTS Customers shall have no claim on such proceeds of the Insurance.

9.3.3 Subject to the requirements of the Lenders under the Financing Agreements, any dispute or difference between the Parties as to whether the Project is no longer economically and technically viable due to a Force Majeure Event or whether that event was adequately covered in accordance with this Agreement by the Insurances shall be determined in accordance with Article 16.

9.4 Effect on liability of the Nodal Agency / Designated ISTS Customers

9.4.1 The Nodal Agency and / or the Designated ISTS Customers shall have no financial obligations or liability whatsoever towards the TSP in respect of this Article 9.

ARTICLE: 10

10. BILLING AND PAYMENT OF TRANSMISSION CHARGES

10.1 Subject to provisions of this Article 10, the Monthly Transmission Charges shall be paid to the TSP, in Indian Rupees, on monthly basis as per the provisions of the Sharing Regulations, from the date on which an Element(s) has achieved COD until the Expiry Date of this Agreement, unless terminated earlier and in line with the provisions of Schedule 4 of this Agreement.

10.2 Calculation of Monthly Transmission Charges:

The Monthly Transmission Charges for each Contract Year including Incentive & Penalty payment shall be calculated in accordance with the provisions of Schedule 4 of this Agreement.

10.3 Rebate & Late Payment Surcharge:

The rebate and late payment surcharge shall be governed as per Sharing Regulations.

10.4 Disputed Bills, Default in payment by the Designated ISTS Customers & Annual Reconciliation:

Any Disputed Bill, Default in payment by the Designated ISTS Customers & Annual Reconciliation shall be governed as per Sharing Regulations.

ARTICLE: 11

11. FORCE MAJEURE

11.1 Definitions

11.1.1 The following terms shall have the meanings given hereunder.

11.2 Affected Party

11.2.1 An Affected Party means any Party whose performance has been affected by an event of Force Majeure.

11.2.2 Any event of Force Majeure shall be deemed to be an event of Force Majeure affecting the TSP only if the Force Majeure event affects and results in, late delivery of machinery and equipment for the Project or construction, completion, commissioning of the Project by Scheduled COD and/or operation thereafter;

11.3 Force Majeure

A 'Force Majeure' means any event or circumstance or combination of events and circumstances including those stated below that wholly or partly prevents or unavoidably delays an Affected Party in the performance of its obligations/ roles under this Agreement, but only if and to the extent that such events or circumstances are not within the reasonable control, directly or indirectly, of the Affected Party and could not have been avoided if the Affected Party had taken reasonable care or complied with Prudent Utility Practices:

a) Natural Force Majeure Events:

i. act of God, including, but not limited to drought, fire and explosion (to the extent originating from a source external to the Site), earthquake, volcanic eruption, landslide, flood, cyclone, typhoon, tornado, or exceptionally adverse weather conditions, which are in excess of the statistical measures for the last hundred (100) years; and

ii. epidemic/ pandemic notified by Indian Governmental Instrumentality.

b) Non-Natural Force Majeure Events:

i. Direct Non–Natural Force Majeure Events

- Nationalization or compulsory acquisition by any Indian Governmental Instrumentality of any material assets or rights of the Affected Party; or
- the unlawful, unreasonable or discriminatory revocation of, or refusal to renew, any Consents, Clearances and Permits required by the Affected Party to perform

their obligations/ roles under the RFP Project Documents or any unlawful, unreasonable or discriminatory refusal to grant any other Consents, Clearances and Permits required for the development/ operation of the Project, provided that a Competent Court of Law declares the revocation or refusal to be unlawful, unreasonable and discriminatory and strikes the same down; or

- any other unlawful, unreasonable or discriminatory action on the part of an Indian Governmental Instrumentality which is directed against the Project, provided that a Competent Court of Law declares the action to be unlawful, unreasonable and discriminatory and strikes the same down.

ii. Indirect Non - Natural Force Majeure Events

- act of war (whether declared or undeclared), invasion, armed conflict or act of foreign enemy, blockade, embargo, revolution, riot, insurrection, terrorist or military action; or

- radio active contamination or ionising radiation originating from a source in India or resulting from any other Indirect Non Natural Force Majeure Event mentioned above, excluding circumstances where the source or cause of contamination or radiation is brought or has been brought into or near the Site by the Affected Party or those employed or engaged by the Affected Party; or

- industry-wide strikes and labour disturbances, having a nationwide impact in India.

11.4 Force Majeure Exclusions

11.4.1 Force Majeure shall not include (i) any event or circumstance which is within the reasonable control of the Parties and (ii) the following conditions, except to the extent that they are consequences of an event of Force Majeure:

(a) Unavailability, late delivery, or changes in cost of the machinery, equipment, materials, spare parts etc. for the Project;

(b) Delay in the performance of any Contractors or their agents;

(c) Non-performance resulting from normal wear and tear typically experienced in transmission materials and equipment;

(d) Strikes or labour disturbance at the facilities of the Affected Party;

(e) Insufficiency of finances or funds or the Agreement becoming onerous to perform; and

(f) Non-performance caused by, or connected with, the Affected Party's:

i. negligent or intentional acts, errors or omissions;

ii. failure to comply with an Indian Law; or

iii. breach of, or default under this Agreement or any Project Documents.

(g) Any error or omission in the survey report provided by BPC during the bidding process.

11.5 Notification of Force Majeure Event

11.5.1 The Affected Party shall give notice to the other Party of any event of Force Majeure as soon as reasonably practicable, but not later than seven (7) days after the date on which such Party knew or should reasonably have known of the commencement of the event of Force Majeure. If an event of Force Majeure results in a breakdown of communications rendering it unreasonable to give notice within the applicable time limit specified herein, then the Party claiming Force Majeure shall give such notice as soon as reasonably practicable after reinstatement of communications, but not later than one (1) day after such reinstatement.

Provided that, such notice shall be a pre-condition to the Affected Party's entitlement to claim relief under this Agreement. Such notice shall include full particulars of the event of Force Majeure, its effects on the Party claiming relief and the remedial measures proposed. The Affected Party shall give the other Party regular reports on the progress of those remedial measures and such other information as the other Party may reasonably request about the Force Majeure.

11.5.2 The Affected Party shall give notice to the other Party of (i) the cessation of the relevant event of Force Majeure; and (ii) the cessation of the effects of such event of Force Majeure on the performance of its rights or obligations/ roles under this Agreement, as soon as practicable after becoming aware of each of these cessations.

11.6 Duty to perform and duty to mitigate

To the extent not prevented by a Force Majeure Event, the Affected Party shall continue to perform its obligations/ roles as provided in this Agreement. The Affected Party shall use its reasonable efforts to mitigate the effect of any event of Force Majeure as soon as practicable.

11.7 Available Relief for a Force Majeure Event

Subject to this Article 11,

(a) no Party shall be in breach of its obligations/ roles pursuant to this Agreement to the extent that the performance of its obligations/ roles was prevented, hindered or delayed due to a Force Majeure Event;

(b) each Party shall be entitled to claim relief for a Force Majeure Event affecting its performance in relation to its obligations/ roles under Articles 3.3.4, 4.4.2 and 6.3.1 of this Agreement.

(c) For the avoidance of doubt, it is clarified that the computation of Availability of the Element(s) under outage due to Force Majeure Event, as per Article 11.3 affecting the TSP shall be as per **Appendix –IV to Central Electricity Regulatory Commission (Terms and Conditions of Tariff) Regulations, 2024** as on Bid Deadline. For the event(s) for which the Element(s) is/are deemed to be available as per **Appendix –IV to Central Electricity Regulatory Commission (Terms and Conditions of Tariff) Regulations, 2024,** then the Transmission Charges, as applicable to such Element(s), shall be payable as per Schedule 4, for the duration of such event(s).

(d) For so long as the TSP is claiming relief due to any Force Majeure Event under this Agreement, the Nodal Agency may, if it so desires, from time to time on one (1) day notice, inspect the Project and the TSP shall provide the Nodal Agency's personnel with access to the Project to carry out such inspections.

(e) For avoidance of doubt, the TSP acknowledges that for extension of Scheduled COD a period up to one hundred eighty (180) days due to Force Majeure event, no compensation on the grounds such as interest cost, incident expenditure, opportunity cost will be made to the TSP. However, if Scheduled COD is extended beyond a period of one hundred eighty (180) days due to Force Majeure event, the TSP will be allowed to recover the interest cost during construction corresponding to the period exceeding one hundred eighty (180) days by adjustment in the Transmission Charges in accordance with Schedule 9.

ARTICLE: 12

12. CHANGE IN LAW

12.1 Change in Law

12.1.1 Change in Law means the occurrence of any of the following after the Bid Deadline resulting into any additional recurring / non-recurring expenditure by the TSP or any savings of the TSP:

- the enactment, coming into effect, adoption, promulgation, amendment, modification or repeal (without re-enactment or consolidation) in India, of any Law, including rules and regulations framed pursuant to such Law, subject to the provisions under Article 12.1.2;
- a change in the interpretation or application of any Law by any Indian Governmental Instrumentality having the legal power to interpret or apply such Law, or any Competent Court of Law;
- the imposition of a requirement for obtaining any Consents, Clearances and Permits which was not required earlier;
- a change in the terms and conditions prescribed for obtaining any Consents, Clearances and Permits or the inclusion of any new terms or conditions for obtaining such Consents, Clearances and Permits;
- any change in the licensing regulations of the Commission, under which the Transmission License for the Project was granted if made applicable by such Commission to the TSP;
- change in wind zone; or
- any change in tax or introduction of any tax made applicable for providing Transmission Service by the TSP as per the terms of this Agreement.

12.1.2 Notwithstanding anything contained in this Agreement, Change in Law shall not cover any change:

a) Taxes on corporate income; and

b) Withholding tax on income or dividends distributed to the shareholders of the TSP.

12.2 Relief for Change in Law

12.2.1 During Construction Period, the impact of increase/decrease in the cost of the Project on the Transmission Charges shall be governed by the formula given in Schedule 9 of this Agreement.

12.2.2 During the Operation Period:

During the operation period, if as a result of Change in Law, the TSP suffers or is benefited from a change in costs or revenue, the aggregate financial effect of which exceeds 0.30% (zero point three percent) of the Annual Transmission Charges in aggregate for a Contract Year, the TSP may notify so to the Nodal Agency and propose amendments to this Agreement so as to place the TSP in the same financial position as it would have enjoyed had there been no such Change in Law resulting in change in costs or revenue as aforesaid.

12.2.3 For any claims made under Articles 12.2.1 and 12.2.2 above, the TSP shall provide to the Nodal Agency documentary proof of such increase / decrease in cost of the Project / revenue for establishing the impact of such Change in Law.

In cases where Change in Law results in decrease of cost and it comes to the notice of Nodal Agency that TSP has not informed Nodal Agency about such decrease in cost, Nodal Agency may initiate appropriate claim.

12.3 Notification of Change in Law:

12.3.1 If the TSP is affected by a Change in Law in accordance with Article 12.1 and wishes to claim relief for such Change in Law under this Article 12, it shall give notice to Nodal Agency of such Change in Law as soon as reasonably practicable after becoming aware of the same.

12.3.2 The TSP shall also be obliged to serve a notice to the Nodal Agency even when it is beneficially affected by a Change in Law.

12.3.3 Any notice served pursuant to Articles 12.3.1 and 12.3.2 shall provide, amongst other things, precise details of the Change in Law and its estimated impact on the TSP.

12.4 Payment on account of Change in Law

12.4.1 The payment for Change in Law shall be through a separate Bill. However, in case of any change in Monthly Transmission Charges by reason of Change in Law, as determined in accordance with this Agreement, the Bills to be raised by the Nodal Agency after such change in Transmission Charges shall appropriately reflect the changed Monthly Transmission Charges.

ARTICLE: 13

13. EVENTS OF DEFAULT AND TERMINATION

13.1 TSP's Event of Default

The occurrence and continuation of any of the following events shall constitute a TSP Event of Default, unless any such TSP Event of Default occurs as a result of any non-fulfilment of its obligations as prescribed under this Agreement by the Nodal Agency or a Force Majeure Event:

a. After having taken up the construction of the Project, the abandonment by the TSP or the TSP's Contractors of the construction of the Project for a continuous period of two (2) months and such default is not rectified within thirty (30) days from the receipt of notice from the Nodal Agency in this regard;

b. The failure to commission any Element of the Project by the date falling six (6) months after its Scheduled COD unless extended by Nodal Agency as per provisions of this Agreement;

c. If the TSP:

i. assigns, mortgages or charges or purports to assign, mortgage or charge any of its assets or rights related to the Project in contravention of the provisions of this Agreement; or

ii. transfers or novates any of its obligations pursuant to this Agreement, in a manner contrary to the provisions of this Agreement;

Except where such transfer is in pursuance of a Law and

- it does not affect the ability of the transferee to perform, and such transferee has the financial and technical capability to perform, its obligations under this Agreement;
- is to a transferee who assumes such obligations under the Project and this Agreement remains effective with respect to the transferee;

d. If:

i. The TSP becomes voluntarily or involuntarily the subject of any bankruptcy or insolvency or winding up proceedings and such

proceedings remain uncontested for a period of thirty (30) days; or

ii. any winding up or bankruptcy or insolvency order is passed against the TSP; or

iii. the TSP goes into liquidation or dissolution or a receiver or any similar officer is appointed over all or substantially all of its assets or official liquidator is appointed to manage its affairs, pursuant to Law,

Provided that a dissolution or liquidation of the TSP will not be a TSP's Event of Default, where such dissolution or liquidation of the TSP is for the purpose of a merger, consolidation or reorganization with the prior approval of the Commission as per the provisions of Central Electricity Regulatory Commission (Procedure, terms and Conditions for grant of Transmission License and other related matters) Regulations, 2006 or as amended from time to time; or

e. Failure on the part of the TSP to comply with the provisions of Article 19.1 of this Agreement; or

f. the TSP repudiates this Agreement and does not rectify such breach even within a period of thirty (30) days from a notice from the Nodal Agency in this regard; or

g. after Commercial Operation Date of the Project, the TSP fails to achieve monthly Target Availability of 98% for a period of six (6) consecutive months or within a non-consecutive period of six (6) months within any continuous aggregate period of eighteen(18) months except where the Availability is affected by Force Majeure Events as per Article 11; or

h. any of the representations and warranties made by the TSP in Article 17 of this Agreement being found to be untrue or inaccurate. Further, in addition to the above, any of the undertakings submitted by the Selected Bidder at the time of submission of the Bid being found to be breached or inaccurate, including but not limited to undertakings from its Parent Company / Affiliates related to the minimum equity obligation; or

i. the TSP fails to complete / fulfil all the activities / conditions within the specified period as per Article 3; or

j. except for the reasons solely attributable to Nodal Agency, the TSP is in material breach of any of its obligations under this Agreement and such material breach is not rectified by the TSP within thirty (30) days of receipt of notice in this regard from the Nodal Agency; or

k. the TSP fails to take the possession of the land required for location specific substations, switching stations or HVDC terminal or inverter stations and / or fails to pay the requisite price to the parties and / or any State Government authority from whom the land is acquired, within twelve (12) months from the Effective Date.

13.2 Termination Procedure for TSP Event of Default

a. Upon the occurrence and continuance of any TSP's Event of Default under Article 13.1 the Nodal Agency may serve notice on the TSP, with a copy to the CEA and the Lenders' Representative, of their intention to terminate this Agreement (a "Nodal Agency's Preliminary Termination Notice"), which shall specify in reasonable detail, the circumstances giving rise to such Nodal Agency's Preliminary Termination Notice.

b. Following the issue of a Nodal Agency's Preliminary Termination Notice, the Consultation Period shall apply and would be for the Parties to discuss as to what steps shall be taken with a view to mitigate the consequences of the relevant Event of Default having regard to all the circumstances.

c. During the Consultation Period, the Parties shall, save as otherwise provided in this Agreement, continue to perform their respective obligations/ roles under this Agreement, and the TSP shall not remove any material, equipment or any part of the Project, without prior consent of the Nodal Agency.

Following the expiry of the Consultation Period, unless the Parties shall have otherwise agreed to the contrary or the circumstances giving rise to Nodal Agency's Preliminary Termination Notice shall have ceased to exist or shall have been remedied, this Agreement may be terminated by the Nodal Agency by giving a Termination Notice to the TSP, in writing, of at least seven (7) days, with a copy to CEA and the Lenders' Representative in order to enable the Lenders to exercise right of substitution in accordance with Article 15.3 of this Agreement.

Further, the Nodal Agency may also initiate proceedings to blacklist the TSP & its Affiliates from participation in any RFP issued by BPCs for a period of 5 years.

13.3 Procedure for Nodal Agency's non-fulfilment of Role

a. Upon the Nodal Agency not being able to fulfil its role under Article 4.2, the TSP may serve notice on the Nodal Agency, with a copy to CEA and the Lenders' Representative (a "TSP's Preliminary Notice"), which notice shall specify in reasonable detail the circumstances giving rise to such non-fulfilment of role by the Nodal Agency.

b. Following the issue of a TSP's Preliminary Notice, the Consultation Period shall apply.

c. The Consultation Period would be for the Parties to discuss as to what steps shall be taken with a view to mitigate the consequences of the relevant non-fulfilment of role by the Nodal Agency including giving time extension to TSP, having regard to all the circumstances.

d. During the Consultation Period, both Parties shall, save as otherwise provided in this Agreement, continue to perform their respective obligations/ roles under this Agreement.

13.4 Termination due to Force Majeure

13.4.1 In case the Parties could not reach an agreement pursuant to Articles 3.3.4 and 4.4.2 of this Agreement and the Force Majeure Event or its effects continue to be present, the Nodal Agency shall have the right to cause termination of the Agreement. In case of such termination, the Contract Performance Guarantee shall be returned to the TSP as per the provisions of Article 6.5.1.

13.4.2 In case of termination of this Agreement, the TSP shall provide to the Nodal Agency the full names and addresses of its Contractors as well as complete designs, design drawings, manufacturing drawings, material specifications and technical information, as required by the Nodal Agency within thirty (30) days of Termination Notice.

13.5 Termination or amendment due to non-requirement of any Element or Project during construction

13.5.1 In case any Element or Project, which is under construction, is no longer required due to any reason whatsoever, the Nodal Agency may issue a notice to this effect to the TSP.

13.5.2 Nodal agency may also issue notice to the TSP seeking their response to the proposed termination/ amendment (as the case may be) of the Agreement. The Nodal Agency shall issue copy of such notice to Lenders. In the notice, Nodal Agency

shall also include an assessment of the physical progress made by TSP in the Element/ Project (as the case may be) that is no longer required.

13.5.3 The TSP shall neither carry out further investment nor carry out any work on the Element/ Project (as the case may be) that is no longer required after delivery of the notice.

13.5.4 After taking into account the comments of the TSP, the Nodal Agency may terminate the Agreement or amend it if both Parties agree to the amendment.

13.6 Revocation of the Transmission License

13.6.1 The Commission may, as per the provisions of the Electricity Act, 2003, revoke the Transmission License of the ISTS Licensee. Further, in such a case, the Agreement shall be deemed to have been terminated.

13.7 Termination Payment

13.7.1 If Agreement is terminated on account of Force Majeure Events, non-requirement of any Element or Project during Construction, Nodal Agency's non-fulfilment of Role & TSP's Event of Default, the TSP shall be entitled for Termination Payment equivalent to valuation of Project Assets. Upon payment, the Nodal Agency shall take over the Project Assets.

ARTICLE: 14

14. LIABILITY AND INDEMNIFICATION

14.1 Indemnity

14.1.1 The TSP shall indemnify, defend and hold the Nodal Agency harmless against:

(a) any and all third party claims, actions, suits or proceedings against the Nodal Agency for any loss of or damage to property of such third party, or death or injury to such third party, arising out of a breach by the TSP of any of its obligations under this Agreement, except to the extent that any such claim, action, suit or proceeding has arisen due to a negligent act or omission, breach of this Agreement or non-fulfilment of statutory duty on the part of Nodal Agency; and

(b) any and all losses, damages, costs and expenses including legal costs, fines, penalties and interest actually suffered or incurred by the Nodal Agency from third party claims arising by reason of:

i. a breach by the TSP of any of its obligations under this Agreement, (provided that this Article 14 shall not apply to such breaches by the TSP, for which specific remedies have been provided for under this Agreement) except to the extent that any such losses, damages, costs and expenses including legal costs, fines, penalties and interest (together to constitute "Indemnifiable Losses") has arisen due to a negligent act or omission, breach of this Agreement or non-fulfilment of statutory duty on the part of the Nodal Agency, or

ii. any of the representations and warranties of the TSP under this Agreement being found to be inaccurate or untrue.

14.1.2 The Nodal Agency shall, in accordance with the Regulations framed by CERC in this regard, indemnify, defend and hold the TSP harmless against:

(a) any and all third party claims, actions, suits or proceedings against the TSP, for any loss of or damage to property of such third party, or death or injury to such third party, arising out of any material breach by the Nodal Agency of any of their roles under this Agreement, except to the extent that any such claim, action, suit or proceeding has arisen due to a negligent act or omission, breach of this Agreement or breach of statutory duty on the part of the TSP, its Contractors, servants or agents; and

(b) any and all losses, damages, costs and expenses including legal costs, fines, penalties and interest ('Indemnifiable Losses') actually suffered or incurred by the TSP from third party claims arising by reason of:

i. any material breach by the Nodal Agency of any of its roles under this Agreement (provided that, this Article 14 shall not apply to such breaches by the Nodal Agency, for which specific remedies have been provided for under this Agreement), except to the extent that any such Indemnifiable Losses have arisen due to a negligent act or omission, breach of this Agreement or breach of statutory duty on the part of the TSP, its Contractors, servants or agents or

ii. any of the representations and warranties of the Nodal Agency under this Agreement being found to be inaccurate or untrue.

14.2 Patent Indemnity:

14.2.1

(a) The TSP shall, subject to the Nodal Agency's compliance with Article 14.2.1 (b), indemnify and hold harmless the Nodal Agency and its employees and officers from and against any and all suits, actions or administrative proceedings, claims, demands, losses, damages, costs, and expenses of whatsoever nature, including attorney's fees and expenses, which the Nodal Agency may suffer as a result of any infringement or alleged infringement of any patent, utility model, registered design, trademark, copyright or other intellectual property right registered or otherwise existing at the date of the Agreement by reason of the setting up of the Project by the TSP.

Such indemnity shall not cover any use of the Project or any part thereof other than for the purpose indicated by or to be reasonably inferred from the Agreement, any infringement resulting from the misuse of the Project or any part thereof, or any products produced in association or combination with any other equipment, plant or materials not supplied by the TSP, pursuant to the Agreement.

(b) If any proceedings are brought or any claim is made against the Nodal Agency arising out of the matters referred to in Article 14.2.1(a), the Nodal Agency shall promptly give the TSP a notice thereof, and the TSP shall at its own expense take necessary steps and attend such proceedings or claim and any negotiations for the settlement of any such proceedings or claim. The TSP shall promptly notify the Nodal Agency of all actions taken in such proceedings or claims.

(c) If the TSP fails to notify the Nodal Agency within twenty-eight (28) days after receipt of such notice from the Nodal Agency under Article 14.2.1(b) above, that it intends to attend any such proceedings or claim, then the Nodal Agency shall be free to attend the same on their own behalf at the cost of the TSP. Unless the TSP has so failed to notify the Nodal Agency within the twenty eight (28) days period, the Nodal Agency shall make no admission that may be prejudicial to the defence of any such proceedings or claims.

(d) The Nodal Agency shall, at the TSP's request, afford all available assistance to the TSP in attending to such proceedings or claim, and shall be reimbursed by the TSP for all reasonable expenses incurred in so doing.

14.2.2

(a) The Nodal Agency, in accordance with the Regulations framed by CERC in this regard, subject to the TSP's compliance with Article 14.2.2(b) shall indemnify and hold harmless the TSP and its employees, officers from and against any and all suits, actions or administrative proceedings, claims, demands, losses, damages, costs and expenses of whatsoever nature, including attorney's fees and expenses, which the TSP may suffer as a result of any infringement or alleged infringement of any patent, utility model, registered design, trademark, copyright or other intellectual property right registered or otherwise existing at the date of the Agreement by reason of the setting up of the Project by the TSP.

(b) If any proceedings are brought or any claim is made against the TSP arising out of the matters referred to in Article 14.2.2 (a) the TSP shall promptly give the Nodal Agency a notice thereof, and the Nodal Agency shall at its own expense take necessary steps and attend such proceedings or claim and any negotiations for the settlement of any such proceedings or claim. The Nodal Agency shall promptly notify the TSP of all actions taken in such proceedings or claims.

(c) If the Nodal Agency fails to notify the TSP within twenty-eight (28) days after receipt of such notice from the TSP under Article 14.2.2(b) above, that it intends to attend any such proceedings or claim, then the TSP shall be free to attend the same on its own behalf at the cost of the Nodal Agency. Unless the Nodal Agency has so failed to notify the TSP within the twenty (28) days period, the TSP shall make no admission that may be prejudicial to the defence of any such proceedings or claim.

(d) The TSP shall, at the Nodal Agency request, afford all available assistance to the Nodal Agency in attending to such proceedings or claim, and shall be reimbursed by the Nodal Agency for all reasonable expenses incurred in so doing.

14.3 Monetary Limitation of liability

14.3.1 A Party ("Indemnifying Party") shall be liable to indemnify the other Party ("Indemnified Party") under this Article 14 for any indemnity claims made in a Contract Year only up to an amount of **Rs.3.67 Crore (Rupees Three Crore Sixty Seven Lakh Only).**

14.4 Procedure for claiming indemnity

14.4.1 Where the Indemnified Party is entitled to indemnification from the Indemnifying

Party pursuant to Articles 14.1 or 14.2 the Indemnified Party shall promptly notify the Indemnifying Party of such claim, proceeding, action or suit referred to in Articles 14.1 or 14.2 in respect of which it is entitled to be indemnified. Such notice shall be given as soon as reasonably practicable after the Indemnified Party becomes aware of such claim, proceeding, action or suit. The Indemnifying Party shall be liable to settle the indemnification claim within thirty (30) days of receipt of the above notice.

Provided however that, if:

i. the Parties choose to contest, defend or litigate such claim, action, suit or proceedings in accordance with Article 14.4.3 below; and

ii. the claim amount is not required to be paid/deposited to such third party pending the resolution of the Dispute,

the Indemnifying Party shall become liable to pay the claim amount to the Indemnified Party or to the third party, as the case may be, promptly following the resolution of the Dispute, if such Dispute is not settled in favour of the Indemnified Party.

14.4.2 The Indemnified Party may contest, defend and litigate a claim, action, suit or proceeding for which it is entitled to be indemnified under Articles 14.1 or 14.2 and the Indemnifying Party shall reimburse to the Indemnified Party all reasonable costs and expenses incurred by the Indemnified Party. However, such Indemnified Party shall not settle or compromise such claim, action, suit or proceedings without first getting the consent of the Indemnifying Party, which consent shall not be unreasonably withheld or delayed.

14.4.3 An Indemnifying Party may, at its own expense, assume control of the defence of any proceedings brought against the Indemnified Party if it acknowledges its obligation to indemnify such Indemnified Party, gives such Indemnified Party prompt notice of its intention to assume control of the defence, and employs an independent legal counsel at its own cost that is reasonably satisfactory to the Indemnified Party.

14.5 Limitation on Liability

14.5.1 Except as expressly provided in this Agreement, neither the TSP nor the Nodal Agency nor their respective officers, directors, agents, employees or Affiliates (including, officers, directors, agents or employees of such Affiliates), shall be liable or responsible to the other Party or its Affiliates including its officers, directors, agents, employees, successors, insurers or permitted assigns for incidental, indirect or consequential, punitive or exemplary damages, connected with or resulting from performance or non-performance of this Agreement, or anything done in connection herewith, including claims in the nature of lost revenues, income or profits (other than payments expressly required and properly due under this Agreement), any increased expense of, reduction in or loss of transmission capacity or equipment used therefore, irrespective of whether such claims are based upon

breach of warranty, tort (including negligence, whether of the Nodal Agency, the TSP or others), strict liability, contract, breach of statutory duty, operation of law or otherwise.

14.5.2 The Nodal Agency shall have no recourse against any officer, director or shareholder of the TSP or any Affiliate of the TSP or any of its officers, directors or shareholders for such claims excluded under this Article. The TSP shall also have no recourse against any officer, director or shareholder of the Nodal Agency, or any Affiliate of the Nodal Agency or any of its officers, directors or shareholders for such claims excluded under this Article.

14.6 Duty to Mitigate

The party entitled to the benefit of an indemnity under this Article 14 shall take all reasonable measures to mitigate any loss or damage which has occurred. If the Party fails to take such measures, the other Party's liabilities shall be correspondingly reduced.

ARTICLE: 15

15. ASSIGNMENTS AND CHARGES

15.1 Assignments:

15.1.1 This Agreement shall be binding upon, and inure to the benefit of the Parties and their respective successors and permitted assigns. This Agreement shall not be assigned by any Party, except as provided in Article 15.3.

15.2 Permitted Charges:

15.2.1 Neither Party shall create or permit to subsist any encumbrance over all or any of its rights and benefits under this Agreement.

15.2.2 However, the TSP may create any encumbrance over all or part of the receivables, or the Project Assets of the Project in favour of the Lenders or the Lenders' Representative on their behalf, as security for amounts payable under the Financing Agreements and any other amounts agreed by the Parties.

Provided that:

i. the Lenders or the Lenders' Representative on their behalf shall have entered into the Financing Agreements and agreed in writing to the provisions of this Agreement; and

ii. any encumbrance granted by the TSP in accordance with this Article 15.2.2 shall contain provisions pursuant to which the Lenders or the Lender's Representative on their behalf agrees unconditionally with the TSP to release from such encumbrances upon payment by the TSP to the Lenders of all amounts due under the Financing Agreements.

15.2.3 Article 15.2.1 does not apply to:

a. liens arising by operation of law (or by an agreement evidencing the same) in the ordinary course of the TSP developing and operating the Project;

b. pledges of goods, the related documents of title and / or other related documents, arising or created in the ordinary course of the TSP developing and operating the Project; or

c. security arising out of retention of title provisions in relation to goods acquired in the ordinary course of the TSP developing and operating the Project.

15.3 Substitution Rights of the Lenders

15.3.1 The TSP would need to operate and maintain the Project under the provisions of this Agreement and cannot assign the Transmission License or transfer the Project or part thereof to any person by sale, lease, exchange or otherwise, without the prior approval of the Nodal Agency.

15.3.2 However, in the case of default by the TSP in debt repayments or in the case of default by the TSP as per Article 13 of this Agreement during the debt repayments, the Commission may, on an application from the Lenders, assign the Transmission License to the nominee of the Lenders subject to the fulfilment of the qualification requirements and provisions of the Central Electricity Regulatory Commission (Procedure, terms and Conditions for grant of Transmission License and other related matters) Regulations, 2006 and as amended from time to time.

ARTICLE: 16

16. GOVERNING LAW AND DISPUTE RESOLUTION

16.1 Governing Law:

This Agreement shall be governed by and construed in accordance with the Laws of India. Any legal proceedings in respect of any matters, claims or disputes under this Agreement shall be under the jurisdiction of appropriate courts in Delhi.

16.2 Amicable Settlement:

16.2.1 Either Party is entitled to raise any claim, dispute or difference of whatever nature arising under, out of or in connection with this Agreement, including its existence or validity or termination or whether during the execution of the Project or after its completion and whether prior to or after the abandonment of the Project or termination or breach of the Agreement by giving a written notice to the other Party, which shall contain:

(i) a description of the Dispute;

(ii) the grounds for such Dispute; and

(iii) all written material in support of its claim.

16.2.2 The other Party shall, within thirty (30) days of issue of notice issued under Article 16.2.1, furnish:

(i) counter-claim and defences, if any, regarding the Dispute; and

(ii) all written material in support of its defences and counter-claim.

16.2.3 Within thirty (30) days of issue of notice by the Party pursuant to Article 16.2.1, if the other Party does not furnish any counter claim or defense under Article 16.2.2, or thirty (30) days from the date of furnishing counter claims or defence by the other Party, both the Parties to the Dispute shall meet to settle such Dispute amicably. If the Parties fail to resolve the Dispute amicably within thirty (30) days from the later of the dates mentioned in this Article 16.2.3, the Dispute shall be referred for dispute resolution in accordance with Article 16.3.

16.3 Dispute Resolution:

All Disputes shall be adjudicated by the Commission.

16.4 Parties to Perform Obligations:

Notwithstanding the existence of any Dispute and difference referred to the Commission as provided in Article 16.3 and save as the Commission may otherwise direct by a final or interim order, the Parties hereto shall continue to perform their respective obligations/ roles (which are not in dispute) under this Agreement.

ARTICLE: 17

17. REPRESENTATION AND WARRANTIES

17.1 Representation and warranties of the Nodal Agency

17.1.1 The Nodal Agency hereby represents and warrants to and agrees with the TSP as follows and acknowledges and confirms that the TSP is relying on such representations and warranties in connection with the transactions described in this Agreement:

a. It has all requisite powers and authority to execute and consummate this Agreement;

b. This Agreement is enforceable against the Nodal Agency in accordance with its terms;

c. The consummation of the transactions contemplated by this Agreement on the part of Nodal Agency will not violate any provision of nor constitute a default under, nor give rise to a power to cancel any charter, mortgage, deed of trust or lien, lease, agreement, license, permit, evidence of indebtedness, restriction, or other contract to which the Nodal Agency is a Party or to which the Nodal Agency is bound, which violation, default or power has not been waived;

17.2 Representation and Warranties of the TSP:

17.2.1 The TSP hereby represents and warrants to and agrees with the Nodal Agency as follows and acknowledges and confirms that the Nodal Agency is relying on such representations and warranties in connection with the transactions described in this Agreement:

a. It has all requisite powers and has been duly authorized to execute and consummate this Agreement;

b. This Agreement is enforceable against it, in accordance with its terms;

c. The consummation of the transactions contemplated by this Agreement on the part of the TSP will not violate any provision of nor constitute a default under, nor give rise to a power to cancel any charter, mortgage, deed of trust or lien, lease, agreement, license, permit, evidence of indebtedness, restriction, or other contract to which the TSP is a Party or to which the TSP is bound which violation, default or power has not been waived;

d. The TSP is not insolvent and no insolvency proceedings have been instituted, nor threatened or pending by or against the TSP;

e. There are no actions, suits, claims, proceedings or investigations pending or, to the best of the TSP's knowledge, threatened in writing against the TSP at law, in equity, or otherwise, and whether civil or criminal in nature, before or by, any court, commission, arbitrator or governmental agency or authority, and there are no outstanding judgments, decrees or orders of any such courts, commission, arbitrator or governmental agencies or authorities, which materially adversely affect its ability to execute the Project or to comply with its obligations under this Agreement.

17.2.2 The TSP makes all the representations and warranties above to be valid as on the Effective Date of this Agreement.

ARTICLE: 18

18. INDEPENDENT ENGINEER

18.1 Appointment of Independent Engineer

The Nodal Agency shall appoint an agency/ company as Independent Engineer as per framework provided in the Guidelines for Encouraging Competition in Development of Transmission Projects for selection of Independent Engineer.

18.2 Roles and functions of Independent Engineer

The role and functions of the Independent Engineer shall include the following:

a. Progress Monitoring as required under this Agreement;

b. Ensuring Quality as required under this Agreement;

c. determining, as required under the Agreement, the costs of any works or services and/or their reasonableness during construction phase;

d. determining, as required under the Agreement, the period or any extension thereof, for performing any duty or obligation during construction phase;

e. determining, as required under the Agreement, the valuation of the Project Assets.

f. Assisting the Parties in resolution of Disputes and

g. Undertaking all other duties and functions in accordance with the Agreement.

18.3 Remuneration of Independent Engineer

The fee and charges of the Independent Engineer shall be paid by the Nodal Agency as per terms & conditions of appointment.

18.4 Termination of appointment

18.4.1 The Nodal Agency may, in its discretion, terminate the appointment of the Independent Engineer at any time, but only after appointment of another Independent Engineer.

18.4.2 If the TSP has reason to believe that the Independent Engineer is not discharging its duties and functions in a fair, efficient and diligent manner, it may make a written representation to the Nodal Agency and seek termination of the appointment of the Independent Engineer. Upon receipt of such representation, the Nodal Agency shall

hold a tripartite meeting with the TSP and Independent Engineer for an amicable resolution, and the decision of Nodal agency is final. In the event that the appointment of the Independent Engineer is terminated hereunder, the Nodal Agency shall appoint forthwith another Independent Engineer.

18.5 Authorised signatories

The Nodal Agency shall require the Independent Engineer to designate and notify to the Nodal Agency up to 2 (two) persons employed in its firm to sign for and on behalf of the Independent Engineer, and any communication or document required to be signed by the Independent Engineer shall be valid and effective only if signed by any of the designated persons; provided that the Independent Engineer may, by notice in writing, substitute any of the designated persons by any of its employees.

ARTICLE: 19

19. MISCELLANEOUS PROVISIONS

19.1 Equity Lock-in Commitment:

19.1.1 The aggregate equity share holding of the Selected Bidder in the issued and paid up equity share capital of **{SPV UNDER INCORPORATION}** shall not be less than Fifty one percent (51%) up to a period of one (1) year after COD of the Project.

Provided that, in case the Lead Member or Bidding Company is holding equity through Affiliate/s, Ultimate Parent Company or Parent Company, such restriction as specified above shall apply to such entities.

Provided further, that in case the Selected Bidder is a Bidding Consortium, the Lead Member shall continue to hold equity of at least twenty six percent (26%) upto a period of one (1) year after COD of the Project and any Member of such Bidding Consortium shall be allowed to divest its equity as long as the other remaining Members (which shall always include the Lead Member) hold the minimum equity specified above.

19.1.2 If equity is held by the Affiliates, Parent Company or Ultimate Parent Company of the Selected Bidder, then, subject to the second proviso to Article 19.1.1, such Affiliate, Parent Company or Ultimate Parent Company shall be eligible to transfer its shareholding in **{SPV UNDER INCORPORATION}** to another Affiliate or to the Parent Company / Ultimate Parent Company of the Selected Bidder. If any such shareholding entity, qualifying as an Affiliate / Parent Company / Ultimate Parent Company, is likely to cease to meet the criteria to qualify as an Affiliate / Parent Company / Ultimate Parent Company, the shares held by such entity shall be transferred to another Affiliate / Parent Company / Ultimate Parent Company of the Selected Bidder.

19.1.3 Subject to Article 19.1.1, all transfer(s) of shareholding of **{SPV UNDER INCORPORATION}** by any of the entities referred to in Article 19.1.1 and 19.1.2 above, shall be after prior written intimation to the Nodal Agency.

19.1.4 For computation of effective Equity holding, the Equity holding of the Selected Bidder or its Ultimate Parent Company in such Affiliate(s) or Parent Company and the equity holding of such Affiliate(s) or Ultimate Parent Company in **{SPV UNDER INCORPORATION}** shall be computed in accordance with the example given below:

If the Parent Company or the Ultimate Parent Company of the Selected Bidder A directly holds thirty percent (30%) of the equity in **{SPV UNDER**

INCORPORATION}, then holding of Selected Bidder A in **{SPV UNDER INCORPORATION}** shall be thirty percent (30%);

If Selected Bidder A holds thirty percent (30%) equity of the Affiliate and the Affiliate holds fifty percent (50%) equity in **{SPV UNDER INCORPORATION},** then, for the purposes of ascertaining the minimum equity/equity lock-in requirements specified above, the effective holding of Bidder A in **{SPV UNDER INCORPORATION}** shall be fifteen percent (15%), (i.e., 30% x 50%)

19.1.5 The provisions as contained in this Article 19.1 shall override the terms of the consortium agreement submitted as part of the Bid.

19.1.6 The TSP shall be responsible to report to Nodal Agency, within thirty (30) days from the occurrence of any event that would result in any change in its equity holding structure from that which existed as on the date of signing of the Share Purchase Agreement. In such cases, the Nodal Agency would reserve the right to ascertain the equity holding structure and to call for all such required documents / information / clarifications as may be required.

19.2 Commitment of maintaining Qualification Requirement

19.2.1 The Selected Bidder will be required to continue to maintain compliance with the Qualification Requirements, as stipulated in RFP Document, till the COD of the Project. Where the Technically Evaluated Entity and/or the Financially Evaluated Entity is not the Bidding Company or a Member in a Bidding Consortium, as the case may be, the Bidding Company or Member shall continue to be an Affiliate of the Technically Evaluated Entity and/or Financially Evaluated Entity till the COD of the Project.

19.2.2 Failure to comply with the aforesaid provisions shall be dealt in the same manner as TSP's Event of Default as under Article 13 of this Agreement.

19.3 Language:

19.3.1 All agreements, correspondence and communications between the Parties relating to this Agreement and all other documentation to be prepared and supplied under the Agreement shall be written in English, and the Agreement shall be construed and interpreted in accordance with English language.

19.3.2 If any of the agreements, correspondence, communications or documents are prepared in any language other than English, the English translation of such agreements, correspondence, communications or documents shall prevail in matters of interpretation.

19.4 Affirmation

The TSP and the Nodal Agency, each affirm that:

1. neither it nor its respective directors, employees, or agents has paid or undertaken to pay or shall in the future pay any unlawful commission, bribe, pay-off or kick-back; and
2. it has not in any other manner paid any sums, whether in Indian currency or foreign currency and whether in India or abroad to the other Party to procure this Agreement, and the TSP and the Nodal Agency hereby undertake not to engage in any similar acts during the Term of Agreement.

19.5 Severability

The invalidity or enforceability, for any reason, of any part of this Agreement shall not prejudice or affect the validity or enforceability of the remainder of this Agreement, unless the part held invalid or unenforceable is fundamental to this Agreement.

19.6 Counterparts

This Agreement may be executed in one or more counterparts, each of which shall be deemed an original and all of which collectively shall be deemed one and the same Agreement.

19.7 Breach of Obligations/ Roles

The Parties acknowledge that a breach of any of the obligations/ roles contained herein would result in injuries. The Parties further acknowledge that the amount of the liquidated damages or the method of calculating the liquidated damages specified in this Agreement is a genuine and reasonable pre-estimate of the damages that may be suffered by the non-defaulting Party in each case specified under this Agreement

19.8 Restriction of Shareholders / Owners Liability

19.8.1 Parties expressly agree and acknowledge that none of the shareholders of the Parties hereto shall be liable to the other Parties for any of the contractual obligations of the concerned Party under this Agreement.

19.8.2 Further, the financial liabilities of the shareholder(s) of each Party to this Agreement shall be restricted to the extent provided in the Indian Companies Act, 1956 / Companies Act, 2013 (as the case may be).

19.9 Taxes and Duties:

19.9.1 The TSP shall bear and promptly pay all statutory taxes, duties, levies and cess, assessed/levied on the TSP, its Contractors or their employees that are required to be paid by the TSP as per the Law in relation to the execution of the Project and for providing Transmission Service as per the terms of this Agreement.

19.9.2 The Nodal Agency shall be indemnified and held harmless by the TSP against any claims that may be made against the Nodal Agency in relation to the matters set out in Article 19.9.1.

19.9.3 The Nodal Agency shall not be liable for any payment of, taxes, duties, levies, cess whatsoever for discharging any obligation of the TSP by the Nodal Agency on behalf of TSP or its personnel, provided the TSP has consented in writing to the Nodal Agency for such work, for which consent shall not be unreasonably withheld.

19.10 No Consequential or Indirect Losses

The liability of the TSP shall be limited to that explicitly provided in this Agreement.

Provided that, notwithstanding anything contained in this Agreement, under no event shall the Nodal Agency or the TSP claim from one another any indirect or consequential losses or damages.

19.11 Discretion:

Except where this Agreement expressly requires a Party to act fairly or reasonably, a Party may exercise any discretion given to it under this Agreement in any way it deems fit.

19.12 Confidentiality

19.12.1 The Parties undertake to hold in confidence this Agreement and RFP Project Documents and not to disclose the terms and conditions of the transaction contemplated hereby to third parties, except:

(a) to their professional advisors;

(b) to their officers, contractors, employees, agents or representatives, financiers, who need to have access to such information for the proper performance of their activities; or

(c) disclosures required under Law,

without the prior written consent of the other Parties.

Provided that, the TSP agrees and acknowledges that the Nodal Agency, may, at any time, disclose the terms and conditions of the Agreement and the RFP Project Documents to any person, to the extent stipulated under the Law and the Competitive Bidding Guidelines.

19.13 Order of priority in application:

Save as provided in Article 2.5, in case of inconsistencies between the terms and conditions stipulated in Transmission License issued by the Commission to the TSP, agreement(s) executed between the Parties, applicable Law including rules and regulations framed thereunder, the order of priority as between them shall be the order in which they are placed below:

- terms and conditions of Transmission License;
- applicable Law, rules and regulations framed thereunder;
- this Agreement;
- Agreement(s), if any, under Sharing Regulations.

19.14 Independent Entity:

19.14.1 The TSP shall be an independent entity performing its obligations pursuant to the Agreement.

19.14.2 Subject to the provisions of the Agreement, the TSP shall be solely responsible for the manner in which its obligations under this Agreement are to be performed. All employees and representatives of the TSP or Contractors engaged by the TSP in connection with the performance of the Agreement shall be under the complete control of the TSP and shall not be deemed to be employees, representatives, Contractors of the Nodal Agency and nothing contained in the Agreement or in any agreement or contract awarded by the TSP shall be construed to create any contractual relationship between any such employees, representatives or Contractors and the Nodal Agency.

19.15 Amendments:

19.15.1 This Agreement may only be amended or supplemented by a written agreement between the Parties.

19.16 Waiver:

19.16.1 No waiver by either Party of any default or breach by the other Party in the performance of any of the provisions of this Agreement shall be effective unless in

writing duly executed by an authorised representative of such Party.

19.16.2 Neither the failure by either Party to insist on any occasion upon the performance of the terms, conditions and provisions of this Agreement nor time or other indulgence granted by one Party to the other Parties shall act as a waiver of such breach or acceptance of any variation or the relinquishment of any such right or any other right under this Agreement, which shall remain in full force and effect.

19.17 Relationship of the Parties:

This Agreement shall not be interpreted or construed to create an association, joint venture, or partnership or agency or any such other relationship between the Parties or to impose any partnership obligation or liability upon either Party and neither Party shall have any right, power or authority to enter into any agreement or undertaking for, or act on behalf of, or to act as or be an agent or representative of, or to otherwise bind, the other Party.

19.18 Entirety:

19.18.1 This Agreement along with its sections, schedules and appendices is intended by the Parties as the final expression of their agreement and is intended also as a complete and exclusive statement of the terms of their agreement.

19.18.2 Except as provided in this Agreement, all prior written or oral understandings, offers or other communications of every kind pertaining to this Agreement or the provision of Transmission Service under this Agreement to the Nodal Agency by the TSP shall stand superseded and abrogated.

19.19 Notices:

19.19.1 All notices or other communications which are required to be given under this Agreement shall be in writing and in the English language

19.19.2 If to the TSP, all notices or communications must be delivered personally or by registered post or facsimile or any other mode duly acknowledged to the addressee below:

Address :

Attention :

Email :

Fax. No. :

Telephone No. :

19.19.3 If to the Nodal Agency, all notices or communications must be delivered personally

or by registered post or facsimile or any other mode duly acknowledged to the addresses below:

(i) **Central Transmission Utility of India Limited (Nodal Agency)**

Address :
Attention :
Email :
Fax. No. :
Telephone No. :

19.19.4 All notices or communications given by facsimile shall be confirmed by sending a copy of the same via post office in an envelope properly addressed to the appropriate Party for delivery by registered mail. All notices shall be deemed validly delivered upon receipt evidenced by an acknowledgement of the recipient, unless the Party delivering the notice can prove in case of delivery through the registered post that the recipient refused to acknowledge the receipt of the notice despite efforts of the postal authorities.

19.19.5 Any Party may by notice of at least fifteen (15) days to the other Party change the address and/or addresses to which such notices and communications to it are to be delivered or mailed.

19.20 Fraudulent and Corrupt Practices

19.20.1 The TSP and its respective officers, employees, agents and advisers shall observe the highest standard of ethics during the subsistence of this Agreement. Notwithstanding anything to the contrary contained in the Agreement, the Nodal Agency may terminate the Agreement without being liable in any manner whatsoever to the TSP, if it determines that the TSP has, directly or indirectly or through an agent, engaged in corrupt practice, fraudulent practice, coercive practice, undesirable practice or restrictive practice in the Bid process. In such an event, the Nodal Agency shall forfeit the Contract Performance Guarantee of the TSP, without prejudice to any other right or remedy that may be available to the Nodal Agency hereunder or subsistence otherwise.

19.20.2 Without prejudice to the rights of the Nodal Agency under Clause 19.20.1 hereinabove and the rights and remedies which the Nodal Agency may have under this Agreement, if a TSP is found by the Nodal Agency to have directly or indirectly or through an agent, engaged or indulged in any corrupt practice, fraudulent practice, coercive practice, undesirable practice or restrictive practice during the Bid process, or after the issue of Letter of Intent (hereinafter referred to as LoI) or after the execution of the agreement(s) required under Sharing Regulations, the Nodal

Agency may terminate the Agreement without being liable in any manner whatsoever to the TSP. Further, the TSP & its Affiliates shall not be eligible to participate in any tender or RFP issued by any BPC for an indefinite period from the date such TSP is found by the Nodal Agency to have directly or indirectly or through an agent, engaged or indulged in any corrupt practice, fraudulent practice, coercive practice, undesirable practice or restrictive practices, as the case may be.

19.20.3 For the purposes of this Clause 19.20, the following terms shall have the meaning hereinafter respectively assigned to them:

(a) **"corrupt practice"** means (i) the offering, giving, receiving, or soliciting, directly or indirectly, of anything of value to influence the actions of any person connected with the Bid process (for avoidance of doubt, offering of employment to or employing or engaging in any manner whatsoever, directly or indirectly, any official of the BPC who is or has been associated or dealt in any manner, directly or indirectly with the Bid process or the LoI or has dealt with matters concerning the RFP Project Documents or arising there from, before or after the execution thereof, at any time prior to the expiry of one year from the date such official resigns or retires from or otherwise ceases to be in the service of the BPC, shall be deemed to constitute influencing the actions of a person connected with the Bid Process); or (ii) engaging in any manner whatsoever, whether during the Bid Process or after the issue of the LoI or after the execution of the RFP Project Documents, as the case may be, any person in respect of any matter relating to the Project or the LoI or the RFP Project Documents, who at any time has been or is a legal, financial or technical adviser of the BPC in relation to any matter concerning the Project;

(b)"**fraudulent practice**" means a misrepresentation or omission of facts or suppression of facts or disclosure of incomplete facts, in order to influence the Bid process;

(c) "**coercive practice**" means impairing or harming, or threatening to impair or harm, directly or indirectly, any person or property to influence any person's participation or action in the Bid process;

(d) "**undesirable practice**" means (i) establishing contact with any person connected with or employed or engaged by the BPC with the objective of canvassing, lobbying or in any manner influencing or attempting to influence the Bid process; or (ii) having a Conflict of Interest; and

(e) "**restrictive practice**" means forming a cartel or arriving at any understanding or arrangement among Bidders with the objective of restricting or manipulating a full and fair competition in the Bid process;

19.21 Compliance with Law:

Despite anything contained in this Agreement but without prejudice to Article 12, if any provision of this Agreement shall be in deviation or inconsistent with or repugnant to the provisions contained in the Electricity Act, 2003, or any rules and regulations made there under, such provision shall be deemed to be amended to the extent required to bring it into compliance with the aforesaid relevant provisions as amended from time to time.

IN WITNESS WHEREOF, THE PARTIES HAVE CAUSED THIS AGREEMENT TO BE EXECUTED BY THEIR DULY AUTHORISED REPRESENTATIVES AS OF THE DATE AND PLACE SET FORTH ABOVE.

1. For and on behalf of TSP

…….

[Signature, Name, Designation and Address]

2. For and on behalf of **Central Transmission Utility of India Limited (Nodal Agency)**

…….

[Signature, Name, Designation and Address]

WITNESSES:

1. For and on behalf of

: **BPC**

……
[Signature]

.....
[Insert, Name, Designation and Address of the Witness]

2. For and on behalf of

: **Nodal Agency**

……
[Signature]

.....
[Insert Name, Designation and Address of the Witness]

Transmission Service Agreement

SCHEDULES

Schedule: 1

Project Description and Scope of Project

A. Description of the Transmission Scheme

The present peak demand of Southern Region as on March, 2025 is about 69,934 MW and expected peak demand of SR as per the 20th EPS during 2029-30 timeframe is about 97.5 GW. Further, as per MNRE OM dated 01.11.2023, Green Hydrogen / Ammonia demand (by 2030) in Southern Region will be about 24.5 GW and this demand is expected to be over and above the peak demand projections of 97.5 GW as per 20th EPS in 2029-30 timeframe, total demand is expected to be over 120 GW.

Present TTC for import of power from NEW grid to SR Grid is about 24,500 MW and it is expected to be enhanced to 25,000 MW with the commissioning of Narendra-Pune 765 kV D/C line. The present limiting constraint for import of power from ER to SR is Angul-Srikakulam 765 kV D/C line and from WR to SR is Nizamabad 765/400 kV, 1500 MVA ICT under contingency. Therefore, the existing / under implementation Inter Regional links between NEW Grid and SR Grid shall not be adequate to meet the above demand.

Accordingly, the Inter-Regional Strengthening between SR Grid and ER Grid i.e. Angul – Srikakulam 765 kV 2nd D/C line (about 275 km) is identified for meeting the import requirements of SR as well as for meeting Green Hydrogen / Ammonia demand in the region.

The transmission scheme was discussed and agreed in the 34th CMETS-SR held on 24.09.2024. The scheme was also deliberated and agreed in the 37th CMETS-ER held on 29.11.2024. During the 37th CMETS-ER, in addition to the Angul – Srikakulam 765 kV 2nd D/C line, 330 MVAr bus reactor at Angul 765/400kV S/s was also agreed for implementation.

The transmission scheme was discussed and agreed in the 52nd SRPC meeting held on 03.08.2024 and the special SRPC meeting held on 04.02.2025. The scheme was also discussed and agreed in the 53rd ERPC meeting held on 11.02.2025.

The National Committee on Transmission in its 29th meeting held on 17.04.2025 has recommended the implementation of the subject transmission scheme through TBCB route and has identified the PFCCL as BPC for bidding of the transmission scheme.

Ministry of Power vide Gazette notification dated 21.05.2025 has notified the transmission scheme for implementation through TBCB route.

B. Detailed Scope of Work

Inter-Regional Strengthening between SR Grid and ER Grid		
S. No.	**Name of Transmission Element**	**Scheduled COD in months from Effective Date**
1.	Angul – Srikakulam 765 kV 2nd D/c line with 240 MVAR SLR at both ends on both circuits • 765 kV line bays – 2 Nos. GIS (at Srikakulam) • 765 kV line bays – 2 Nos. AIS (at Angul) • 765 kV, 240 MVAr SLR at Srikakulam – 2 Nos. (6x80 MVAr switchable units) • 765 kV, 240 MVAr SLR at Angul – 2 Nos. (6x80 MVAr switchable units)	30 Months
2.	1x330 MVAR, 765 kV bus reactor (3rd) at Angul Substation • 765 kV bus reactor – 1 No. (3x110 MVAr switchable units) • 765 kV bus reactor bay – 1 No.	
Notes: i. POWERGRID shall provide space (free of cost) for 2 Nos. of 765 kV line bays each at Srikakulam (GIS) and Angul for termination of Angul-Srikakulam 765 kV D/c line. ii. POWERGRID shall provide space (free of cost) for 1x330 MVAr bus reactor along with associated bay at Angul.		

SPECIFIC TECHNICAL REQUIREMENTS FOR TRANSMISSION LINE

The design, routing and construction of transmission lines shall be in accordance with Chapter V, Part A of CEA (Technical Standards for Construction of Electrical Plants and Electric Lines) Regulations 2022, as amended from time to time. Other CEA Regulations/ guidelines as amended up to date and Ministry of Power (MoP) guidelines, as applicable, shall also be followed.

A.1.0 Selection of tower type shall be made as per CEA Regulations, however, in case lattice type towers are used, the following shall also be applicable:

A.2.0 Steel section of grade E 250 and/or grade E 350 as per IS 2062, only are permitted for use in towers, extensions, gantry structures and stub setting templates. For towers in snowbound areas, steel sections shall conform to Grade-C of IS-2062.

A.3.0 Towers shall be designed as per IS-802:2015, however the drag coefficient of the tower shall be as follows: -

Solidity Ratio	Drag Coefficient
Up to 0.05	3.6
0.1	3.4
0.2	2.9
0.3	2.5
0.4	2.2
0.5 and above	2.0

A.4.0 Transmission Service Provider (TSP) shall adopt any additional loading/ design criteria for ensuring reliability of the line, if so desired and /or deemed necessary.

A.5.0 Transmission line shall be designed considering wind zones as specified in wind map given in National Building Code 2016, Vol.1. The developer shall also make his own assessment of local wind conditions and frequent occurrences of High Intensity Winds (HIW) due to thunderstorms, dust storms, downburst etc. along the line route and wherever required, higher wind zone than that given in wind map shall be considered for tower design for ensuring reliability of line. Further, for transmission line sections passing within a distance of 50 km from the boundary of two wind zones, higher of the two wind zones shall be considered for design of towers located in such sections.

A.6.0 Selection of reliability level for design of tower shall be as per CEA Regulation (Technical Standards for Construction of Electrical Plants and Electric Lines) Regulations 2022, as amended from time to time.

A.7.0 a) In case of construction of transmission line of Voltage level of 400 kV and above, under-crossing of the existing transmission line shall not be allowed. In the case where it is inevitable to under-cross the existing transmission line then TSP shall seek

prior approval from Chief Electrical Inspector, CEA with detailed study ensuring that all statutory electrical clearances and Electric Field limit of 10 kV/m at 1 m and 1.8 m from ground level is not violated.

b) For power line crossing of 400 kV or above voltage level, large angle and dead end towers (i.e. D/DD/QD) shall be used on either side of power line crossing.

c) For power line crossing of 132 kV and 220 kV (or 230 kV) voltage level, angle towers (B/C/D/DB/DC/DD/ QB/QC/QD) shall be used on either side of power line crossing depending upon the merit of the prevailing site condition and line deviation requirement.

d) For power line crossing of 66 kV and below voltage level, suspension/tension towers shall be provided on either side of power line crossing depending upon the merit of the prevailing site condition and line deviation requirement.

e) For crossing of railway tracks, national highways and state highways, the rules/ regulations of appropriate authorities shall be followed.

A.8.0 The relevant conductor configuration shall be as follows: -

1. Angul- Srikakulam 765 kV 2nd D/C line

Type of conductor: ACSR / AAAC / AL59

Basic Parameters:

Transmission line	**ACSR Conductor specified**	**Equivalent AAAC conductor based on 53.5% conductivity of Al Alloy**	**Equivalent minimum size of AL59 conductor based on 59% conductivity of AL Alloy***	**Sub-conductor Spacing**
765 kV D/C (Hexa Bundle) Transmission Lines	**Zebra : Stranding** 54/3.18 mm-Al + 7/3.18 mm-Steel, 428 mm^2, Aluminium area, 28.62 mm diameter Maximum DC Resistance at 20°C (Ω/km): 0.06868	**Stranding details:** 61/3.19 mm, 487.5 mm^2 Aluminium alloy area 28.71 mm diameter Maximum DC Resistance at 20°C (Ω/km): 0.06815	**Stranding details:** 61/3.08 mm, 454 mm^2 Aluminium alloy area 27.72 mm diameter Maximum DC Resistance at 20°C (Ω/km): 0.0653	457 mm

Transmission line	ACSR Conductor specified	Equivalent AAAC conductor based on 53.5% conductivity of Al Alloy	Equivalent minimum size of AL59 conductor based on 59% conductivity of AL Alloy*	Sub-conductor Spacing
	Minimum UTS: 130.32 kN	Minimum UTS: 135.6 kN	Minimum UTS: 108 kN	

Note:

1. **To select any size above the minimum, the sizes mentioned in the Indian standard IS-398 (part-6) shall be followed.*
2. *The transmission lines shall have to be designed for a maximum operating conductor temperature of 85 ^{O}C.*

A.9.0 The required phase to phase spacing and horizontal spacing for 765 kV line shall be governed by the tower design as well as minimum live metal clearances for 765 kV voltage level under different insulator swing angles. However, the phase to phase spacing for 765 kV line shall not be less than 15 m.

A.10.0 All electrical clearances including minimum live metal clearance, ground clearance and minimum mid span separation between earth wire and conductor as given below shall be considered:

I. **Minimum live metal clearances for 765 kV line:**

a) (i) <u>Under stationary conditions</u>

From tower body: For 765 kV D/C: 6.1 m

For 765 kV S/C: 5.6 m

(ii) <u>Under swing conditions</u>

Wind Pressure Condition	Minimum Electrical Clearance
a) Swing angle (25º)	4.4 m
b) Swing angle (55º)	1.3 m

b) Minimum ground clearance for 765 kV line: 18 m

c) Minimum mid span separation between earth-wire and conductor for 765 kV line: 9.0 m

A.11.0 Shielding angle shall not exceed 10 deg for 765 kV D/C transmission line.

A.12.0 The Fault current for design of line shall be 50 kA for 1 sec for 765 kV.

A.13.0 In case of 400 kV and above voltage class lines, at least one out of two earth wires shall be OPGW and second earth wire, if not OPGW, shall be either of Galvanized Stranded Steel (GSS) or Aluminum Alloy Conductor Steel Reinforced (AACSR) conductor type or any other suitable conductor type depending upon span length and other technical consideration.

A.14.0 Each tower shall be earthed such that tower footing impedance does not exceed 10 ohms. Pipe type or Counterpoise type earthing shall be provided in accordance with relevant IS. Additional earthing shall be provided on every 7 to 8 km distance for direct earthing of both shield wires. If site condition demands, multiple earthing or use of earthing enhancement compound shall be used.

A.15.0 Pile type foundation shall be used for towers located in river or creek bed or on bank of river having scourable strata or in areas where river flow or change in river course is anticipated, based on detailed soil investigation and previous years' maximum flood discharge of the river, maximum velocity of water, highest flood level, scour depth and anticipated change in course of river based on river morphology data of at least past 20 years to ensure availability and reliability of the transmission line.

A.16.0 Transmission line route shall be finalized, in consultation with appropriate authorities so as to avoid the habitant zones of endangered species and other protected species. Bird diverters, wherever required, shall be provided on the transmission line. In order to optimize the route, use of GATISHAKTI platform shall also be made.

A.17.0 Wherever, the transmission lines are passing through cyclone prone areas i.e., areas up to 60 km from coast following shall also be applicable:

a) Terrain category-I, with terrain roughness factor (K2) of 1.08 shall be considered for tower design for exposed open terrain with few or no obstruction, which also includes open sea coasts, open stretch of water, desert and flat treeless plains.

b) Importance factor for cyclonic region (K4) of 1.3 shall be considered for tower design.

c) The number of consecutive spans between the section points/ angle point shall not exceed 10 spans or 3 km instead of conventional practice of 15 spans or 5 km, in order to reduce the failure of such towers in coastal areas due to cascading effect. The section shall be terminated with tension tower/ angle tower and angle of deviation should be based on the site requirement.

A.18.0 Wherever, the transmission lines are passing through cyclone prone areas (i.e. areas up to 60 km from coast)/ creek regions/ aggressive soil areas following shall also be applicable:

a) The fabricated tower parts and stubs shall have a minimum overall zinc coating of 900 g/m^2 of surface area except for plates and sections below 5 mm which shall have a minimum overall zinc coating of 610 g/m^2 of surface area. The average zinc coating for all sections and plates 5 mm and above shall be maintained as 127 microns and that for plates and sections below 5 mm shall be maintained as 87 microns.

b) Ready mix concrete of M30 Grade shall be used to avoid use of locally available saline water. However, design mix concrete of M30 Grade conforming to IS 456 with potable water can be used at locations where transportation of ready-mix concrete is not feasible. Minimum cement content in any case shall not be less than 330 kg/m^3.

c) The surface of the reinforced steel shall be treated with epoxy-based coating to enhance corrosion performance of foundation. Use of epoxy coated reinforcement in foundation shall be as per IS 13620. In addition, two (2) coats of bituminous painting of minimum 1.6 kg/m^2 per coat shall be applied on all exposed faces of foundation (i.e. pedestal and base slab).

d) Double coat 20 mm thick cement plaster shall be provided on all exposed concrete surface as well up to 300 mm below ground level to give protection to concrete surface from environmental and saline effect.

e) Before coping of chimney top portion, three coats of anti-corrosive paint of minimum 30-35 microns dry film thickness each shall be applied on the stub in the 50 mm coping portion as well as up to 350 mm above CL portion.

A.19.0 The raised chimney foundation is to be provided in areas prone to flooding/water stagnation like paddy field /agricultural field and undulated areas to avoid direct contact of water with steel part of tower. The top of the chimney of foundation should be at least above High Flood Level (HFL) or the historical water stagnation/ logging level (based on locally available data) or above High Tide Level or 500 mm above Natural Ground level (whichever is higher).

A.20.0 Routing of transmission line through protected areas of India shall be avoided to the extent possible. In case, it is not possible to avoid protected areas, the towers of the transmission line up to 400 kV level, which are installed in protected areas shall be designed for Multicircuit (4 circuits) configuration of same voltage level considering reliability level of at least two (2). The top two circuits of these multi-circuit towers shall be used for stringing of the transmission line under present scope and the bottom two circuits shall be made available for stringing of any future transmission line of any transmission service providers/ State transmission utilities/Central transmission utilities passing through the same protected area. Further, the

configuration and coordinates of such transmission towers shall be submitted to CEA, CTU and BPC by the TSP.

A.21.0 The TSP shall abide by the Guidelines of CEA w.r.t. shifting of transmission lines for NHAI projects and other projects.

A.22.0 Safety precautions in regards to gas/oil pipelines in vicinity of Transmission lines shall be taken in coordination with gas/ petroleum authorities.

A.23.0 The stringing of the transmission line in the forest area shall be carried out through drone.

A.24.0 The tower shall be designed considering the porcelain Insulators with creepage factor of 31 mm/ kV irrespective of type of insulator used.

A.25.0 RoW width and Span in different terrain shall be as per Schedule VII of CEA (Technical Standards for Construction of Electrical plants and Electric Lines) Regulations 2022 and RoW guidelines issued vide CEA-PS-14-86/2/2019-PSETD Division dated 24.09.2024.

SPECIFIC TECHNICAL REQUIREMENTS FOR SUBSTATION

Extension of proposed **Angul S/s** shall be conventional Air Insulated Substation (AIS) type conforming to the requirements of CEA (Technical Standards for Construction of Electrical Plants and Electric Lines) Regulations, 2022, as amended from time to time.

Extension of proposed **Srikakulam S/s** shall be conventional Gas Insulated Substation (GIS) type conforming to the requirements of CEA (Technical Standards for Construction of Electrical Plants and Electric Lines) Regulations 2022, as amended from time to time.

Other CEA Regulations/guidelines as amended up to date and MoP guidelines, as applicable, shall also be followed.

B.1.0 Salient features of Substation Equipment and Facilities

The design and specification of substation equipment are to be governed by the following factors:

B.1.1 Insulation Coordination

The system design parameters for substations/switchyards shall be as given below:

S. No.	Description of parameters	765 kV Angul S/s Extn. (AIS)	765 kV Srikakulam S/s Extn. (GIS)
		765 kV System	**765 kV System**
1.	System operating voltage	765 kV	765 kV
2.	Maximum voltage of the system (rms)	800 kV	800 kV
3.	Rated frequency	50 Hz	50 Hz
4.	No. of phases	3	3
5.	Rated Insulation levels		
i)	Lightning impulse withstand voltage for (1.2/50 micro sec.) - for Equipment other than Transformer and reactor - for Insulator String	 2100 kVp 2100 kVp	 2100 kVp 2100 kVp
ii)	Switching Impulse withstand	1550 kVp	1425 kVp (for GIS)

	Voltage (250/2500 micro sec.) dry and wet		
iii)	One minute power frequency dry withstand voltage (rms)	830 kV	960 kV (for GIS)
6.	Corona Extinction Voltage	508 kV	508 kV
7.	Max. radio interference voltage for frequency between 0.5 MHz and 2 MHz	2500 micro-volts at 508 kV rms	2500 micro-volts at 508 kV rms
8.	Minimum creepage distance for insulator string/ longrod insulators/ outdoor bushings	24800 mm (31 mm/kV)	24800 mm (31 mm/kV)
9.	Minimum Creepage distance for Switchyard equipment	24800 mm (31 mm/kV)	24800 mm (31 mm/ kV)
10.	Max. Fault Current	50 kA	50 kA
11.	Duration of Fault	1 sec	1 sec

B.1.2 Switching Scheme

The switching schemes, as mentioned below, shall be adopted at various voltage levels of substation/switchyard:

Substation	**765 kV side**
765 kV Angul S/s (AIS) Extn.	One and Half breaker
765 kV Srikakulam S/s (GIS) Extn.	One and Half breaker

Notes: -

i) *For one and half breaker switching scheme, any double circuit line consisting of two numbers of feeders and originating from the same transmission or generating switchyard shall not be terminated in one diameter.*

ii) *Two transformers of same HV rating shall not be connected in the same diameter and similarly two bus reactors of same HV rating shall also not be connected in the same diameter.*

iii) *A diameter in one and half breaker scheme is a set of 3 circuit breakers with associated isolators, earth switches, current transformers etc. for controlling two (2) numbers of feeders.*

iv) *Connection arrangement of Switchable Line reactors shall be such that it can be used as Line reactor as well as Bus reactor with suitable NGR bypass arrangement.*

v) *In case of GIS substation where the bus scheme is One and Half breaker scheme, the diameters shall be complete with feeder/line side isolator and GIS duct of the future bay shall be brought outside the GIS hall/building with extension/interface module suitably.*

vi) *TSP shall plan distribution of line and transformer feeders to bus bar in such a way that all power can be evacuated successfully without crossing thermal limit at any point of bus-bar.*

vii) *For AIS type substation, TSP shall keep space provisions for future elements such that interconnection arrangement to the corresponding future bays can be done with overhead AIS type connection without any cable/ GIS duct.*

viii) **765 kV Angul S/s Extn:**

Existing SLD of Angul S/s as mentioned at clause B.5 has been provided with RfP. Angul – Srikakulam 765 kV 2nd D/C line shall be terminated in two new diameters for which Main & Tie bays shall be constructed under present scope. Bay configuration shall be as follows:

Configuration	Number of diameters
Line with Switchable Line Reactor-Tie- Future	2 (two)

Further, 765 kV Bus Reactor shall be terminated in existing diameter for which Main bay (bay no. 732) shall be executed under present scope.

ix) **765 kV Srikakulam S/s Extn:**

For termination of Angul – Srikakulam 765 kV 2nd D/C line, TSP shall complete the bay configuration of 2 Nos. of diameter (GIS) as per following:

Configuration	Number of diameters
Line with Switchable Line Reactor-Tie- Line with Switchable Line Reactor (for Future) *	2 (two)

Note (*): GIS modules for future Line bay and Switchable Line Reactor shall be provided by TSP under present scope.

x) In one and half breaker scheme, both main bay and tie bay shall be completed for controlling a feeder. Further, all associated interconnection work shall also be in the present scope of TSP.

B.2.0 Substation Equipment and Facilities (Voltage level as applicable):

The switchgear shall be designed and specified to withstand operating conditions and duty requirements. All equipment shall be designed considering the following capacity.

Sl. No	Description of Bay	765 kV Angul S/s (AIS)	765 kV Srikakulam S/s (GIS)
		765 kV	765 kV
1.	Bus Bar	As per existing	As per existing
2.	Line bay	3150 A	3150 A
3.	Reactor bay	3150 A	3150 A

B.2.1 (765/√3) kV, Single Phase Shunt Reactor

80 MVAr and 110 MVAr, 765/√3 kV, 1-Phase Reactor (including arrangement for 3-phase bank formation of 240 MVAr and 330 MVAr respectively) shall conform to CEA's "Standard Specifications and Technical Parameters for Transformers and Reactors (66 kV and above voltage class)" as amended up to date available on CEA website.

Connection arrangement for utilization of existing Spare Single Phase Reactor unit: TSP shall make the arrangement of present Reactor bank in such a way that the existing spare unit can be utilized for Reactor bank under present scope without its physical movement.

Neutral Grounding Reactor and Surge Arrester for 765 kV Switchable Line Reactors (as applicable):

The neutral of the switchable line reactors (wherever provided) shall be grounded through adequately rated Neutral Grounding Reactors (NGR) to facilitate single phase auto- reclosure, provided that the NGR shall be provided with suitable bypass arrangement so that the switchable line reactor can be used as bus reactor as and when required. The neutral of bus reactor shall be solidly grounded.

NGR shall be oil filled or dry type air core for outdoor application. NGR shall conform to CEA's "Standard specifications and technical parameters of transformers and reactors (66 kV and above Voltage Class)", as amended up to date. Technical parameters of NGR shall be as specified in Annexure-A of above-mentioned document.

The surge arresters (rated voltage of arrester in co-ordination with ohmic value of NGR shall be decided by the TSP) shall be provided and physically located between the neutral of shunt reactor (brought out at 145 kV class bushing) and neutral grounding reactor. The surge arresters shall be of Station Medium (SM) class duty gapless Metal Oxide (ZnO) type conforming in general to IEC-60099-4. Arresters shall be hermetically sealed units, of self-supporting construction, suitable for mounting on structures.

The Ohmic value of NGR for Line Reactors shall be as follows:

S. No.	Line Name	Substation Name	NGR value (Ohm)
1.	Angul – Srikakulam 765 kV 2nd D/C line (about 275 km) with 240 MVAR SLR at both ends on both circuits	Srikakulam S/s	600
		Angul S/s	600

B.2.2 765 kV GIS Substation equipment

GIS (Gas Insulated Switchgear) shall be Indoor type in accordance to IEC: 62271-203. The switchgear shall be designed and specified to withstand operating conditions and duty requirements. All the switchgear such as Circuit Breaker, isolator, earth switch including CT, PT etc. shall be GIS type. The Surge Arrestor and Voltage Transformer shall be either GIS or outdoor AIS type.

The GIS assembly shall consist of separate modular compartments e.g. Circuit Breaker compartment, Bus bar compartment filled with SF_6 Gas and separated by gas tight partitions so as to minimize risk to human life, allow ease of maintenance and limit the effects of gas leaks failures and internal arcs etc. These compartments shall be designed to minimize the risk of damage to adjacent sections and protection of personnel in the event of a failure occurring within the compartments. Rupture diaphragms with suitable deflectors shall be provided to prevent uncontrolled bursting pressures developing within the enclosures under worst operating conditions, thus providing controlled pressure relief in the affected compartment. The arrangement of gas sections or compartments shall be such as to facilitate future extension of any make without any drilling, cutting or welding on the existing equipment. To add equipment, it shall not be necessary to move or dislocate the existing switchgear bays. The layout of Gas Insulated Bus Ducts shall be properly planned to optimize the length of bus ducts and for easy accessibility for maintenance. The length of busbars, bus ducts, isolator sections shall be optimized considering effects of fast transient voltage due to isolator operations.

The bus bar modules including auxiliary bus modules (wherever applicable) shall be provided with suitable End Piece (Interface) module on both sides with the test link facility for future extension as per provisions of future requirements. The end piece module shall be designed in such a way so that future GIS modules may be tested without extending test voltage to existing bus and vice-versa by removing the test link.

TSP shall make available the complete details for the design of interface module such as cross section, enclosure material, enclosure dimensions (inner and outer), Flange diameter (inner and outer), conductor cross-section and connection arrangement, bolt

spacing and dimension, rated gas pressure, Gasket detail etc. Further, adequate space for GIS busbar interface module shall be taken into account for future scope.

Each section shall have plug-in or easily removable connection pieces to allow for easy replacement of any component with the minimum disturbance to the remainder of the equipment. Inspection windows (View Ports) shall be provided for Disconnector Switches and both type of earth switches i.e. Maintenance and fast operating.

Local Control Cabinets (LCC) shall be provided as per requirement. The alarm and annunciation of GIS equipment shall be wired to the SCADA System.

The material and thickness of the enclosures shall be such as to withstand an internal flashover without burns through for a period of 300 ms at rated short time withstand current. The material shall be such that it has no effect of environment as well as from the by-products of SF_6 breakdown under arcing conditions. This shall be validated with Type Test.

Service continuity requirement for GIS:

The GIS equipment with the given bus switching arrangement shall be divided into different gas compartments. During the work such as a fault repair or major maintenance, requiring the dismantling of a gas compartment for which more than one compartments may need to be de-gassed.

TSP shall meet following Service continuity conditions (to the extent possible) with ensuring equipment and operating personnel's safety:

- For One and half breaker bus switching scheme, during a fault in Circuit Breaker compartment, no bus bar and feeder is permitted out of service during maintenance and repair/replacement.
- During a fault in a GIS compartment other than the Circuit Breaker compartment, maximum of one bus bar and/or one feeder is permitted out of service during maintenance and repair/replacement.

UHF sensors in GIS for PD (Partial Discharge) detection:

The adequate number of Ultra High Frequency (UHF) sensors shall be provided in the offered GIS along with suitable portable type Partial Discharge (PD) measuring instrument for detection of Partial discharge (of 5 pC and above as per IEC 60270). The number and location of these sensors shall be based on laboratory tests on the typical design of GIS as per recommendations of CIGRE Document No. 654 (Application Guide for sensitivity verification for UHF Partial discharge detection system for GIS).

B.2.2.1 Circuit Breakers (GIS)

GIS Circuit breakers shall in general be of C2-M2 class and comply to IEC-62271-100. The rated break time shall not exceed 40 ms (milli second) for 765 kV. Circuit breakers

shall be suitable for single phase and three phase auto reclosing. Each breaker would have two sets of trip circuits which would be connected to separate DC supplies for greater reliability. The Circuit breakers controlling 765 kV lines shall be provided with pre-insertion closing resistor of about 450 ohms with 9 ms insertion time or Controlled Switching Device (CSD). The short line fault capacity shall be the same as the rated capacity and this is proposed to be achieved without use of opening resistors. Controlled switching device shall be provided in the Circuit Breaker of the switchable line reactor bay and in Main and Tie bay circuit breakers of line with non-switchable line reactors, Bus reactors and Transformers for 400 kV and above voltage class.

B.2.2.2 Isolators (GIS)

The isolators shall comply to IEC 62271-102 in general. Earth switches shall be provided at various locations to facilitate maintenance. Main blades and earth blades shall be interlocked and interlock shall be fail safe type. All isolators and earth switches shall be motor operated type.

The isolator shall be of extended mechanical endurance class-M2 and suitable for Bus Transfer Current Switching duty as per IEC standards. High speed earthing switches shall be provided for grounding purposes at overhead line terminations and cable terminations and shall have fault making capability as specified. Earth switch for line isolator shall be of earthing switch class E1 and shall be suitable for induced current switching duty as defined for Class-B as per relevant standard.

B.2.2.3 Current Transformers (GIS)

Current Transformers shall comply with IEC 61869 in general. All ratios shall be obtained by secondary taps only. Generally, Current Transformers (CT) shall have five cores (four for protection and one for metering) whereas; CT in Tie bays shall have six cores (four for protections and two for metering) suitably distributed on both sides of CB (for 400 kV and above voltage class). The burden and knee point voltage shall be in accordance with the requirements of the system including possible feeds for telemetry. The accuracy class for protection core shall be PX and for the metering core it shall be 0.2S. The rated burden of cores shall be closer to the maximum burden requirement of metering and protection system (not more than 20 VA for metering core) for better sensitivity and accuracy.

The instrument security factor shall be less than 10 for CTs of 765 kV voltage class.

B.2.2.4 Voltage Transformer (GIS)

The voltage transformers shall conform to IEC-61869. Voltage transformers shall be of electromagnetic type with SF_6 gas insulation. The earth end of the high voltage winding and the ends of the secondary winding shall be brought out in the terminal box. The

voltage transformers shall be located as a separate bay module and will be connected phase to ground and shall be used for protection, metering and synchronization. The voltage transformers shall be of inductive type, nonresistant and shall be contained in their own-SF6 compartment, separated from other parts of installation. The voltage transformer shall be effectively shielded against high frequency electromagnetic transients. The voltage transformer shall have three secondary windings out of which two shall be used for protection and one for metering. The voltage transformer should be thermally and dielectrically safe when the secondary terminals are loaded with the guaranteed thermal burdens. The accuracy class for protection cores shall be 3P. The accuracy of 0.2 on metering core should be maintained throughout the entire burden range on all the three windings without any adjustments during operation. The rated burden of cores shall be closer to the maximum burden requirement of metering and protection system (not more than 50 VA for metering core) for better sensitivity and accuracy.

B.2.2.5 Surge Arresters (GIS) (if applicable)

624 kV Station High (SH) duty gapless type Surge arresters with thermal energy (Wth) of minimum 13 kJ/ kV shall be provided for 800 kV system conforming to IEC 60099-4 in general. Other characteristics of Surge arrester shall be chosen in accordance with system requirements. Surge arresters shall be provided at line entrances, near transformers and Reactors so as to achieve proper insulation coordination. A leakage current monitor with surge counter shall be provided with each surge arrester.

B.2.2.6 SF_6 to Air Bushing

Outdoor bushings, for the connection of conventional external conductors to the SF_6 metal enclosed switchgear, shall be provided. Bushings shall generally be in accordance with the requirements of IEC-60137. The creepage distance over the external surface of outdoor bushings shall not be less than 31 mm/ kV. SF_6 to air Bushing shall be of Polymer/ composite type and shall be robust and designed for adequate cantilever strength to meet the requirement of seismic conditions. The electrical and mechanical characteristics of bushings shall be in accordance with IEC-60137. Polymer/composite insulator shall be seamless sheath of silicon rubber compound. The housing and weather sheds should have silicon content of minimum 30% by weight. It should protect the bushing against environmental influences, external pollution and humidity. The hollow silicon composite insulators shall comply with the requirements of IEC 61462 and the relevant parts of IEC-62217.

B.2.3 765 kV AIS Substation equipment (as applicable)

B.2.3.1 Circuit Breakers (AIS)

The circuit breakers and accessories shall conform to IEC: 62271-100, IEC: 62271-1 and shall be of SF_6 Type. The circuit breakers shall be of class C2-M2 (as per IEC) with regard to restrike probability during capacitive current breaking and mechanical endurance. The rated break time shall not exceed 40 ms for 765 kV circuit breakers. The 765 kV circuit breakers shall be provided with single phase and three phase auto reclosing. Each breaker would have two sets of trip circuits, which would be connected to separate DC supplies for greater reliability. The circuit breakers controlling 765 kV lines shall be provided with either pre-insertion closing resistor of about 450 ohm maximum with 9 ms insertion time or with Controlled Switching Device. The short line fault capacity shall be same as the rated capacity and this is proposed to be achieved without use of opening resistors. The controlled switching device shall be provided in circuit breakers of switchable line reactor bay and in Main and Tie bay circuit breakers of line with non-switchable line reactors, Bus Reactors and Transformers of 400 kV and above voltage class.

B.2.3.2 Isolators (AIS)

The isolators shall comply with IEC 62271-102 in general. 765 kV isolator design shall be double break or vertical break or knee-type. All isolators and earth switches shall be motor operated. Earth switches shall be provided at various locations to facilitate maintenance. Main blades and earth blades shall be interlocked and interlock shall be fail safe type. The 765 kV-earth switch for line isolator shall be suitable for induced current switching duty as defined for Class-B.

B.2.3.3 Current Transformers (AIS)

Current Transformers shall comply with IEC 61869 in general. All ratios shall be obtained by secondary taps only. Generally, Current Transformers (CT) for 765 kV shall have six cores (four for protection and two for metering). The burden and knee point voltage shall be in accordance with the requirements of the system including possible feeds for telemetry. The accuracy class for the protection core shall be PX and for the metering core it shall be 0.2S. The rated burden of cores shall be closer to the maximum burden requirement of the metering and protection system (not more than 20 VA for metering core) for better sensitivity and accuracy. The instrument security factor shall be less than ten (10) for CTs of 765 kV voltage class.

B.2.3.4 Capacitive Voltage Transformers (AIS)

Capacitive Voltage transformers shall comply with IEC 61869 in general. These shall have three secondaries out of which two shall be used for protection and one for

metering. The accuracy class for protection cores shall be 3P and for metering core it shall be 0.2. The Capacitive Voltage Transformers on lines shall be suitable for Carrier Coupling. The Capacitance of CVT for 765 kV shall be 8800 pF. The rated burden of cores shall be closer to the maximum burden requirement of metering and protection system (not more than 50 VA for metering core) for better sensitivity and accuracy.

B.2.3.5 Surge Arresters (AIS)

624 kV Station High (SH) duty gapless type Surge Arresters with thermal energy (W_{th}) of minimum 13 kJ/kV, conforming to IEC 60099-4 in general shall be provided for 800 kV system. Other characteristics of Surge arrester shall be chosen in accordance with system requirements. Surge arresters shall be provided at line entrances, near Transformers and Reactors so as to achieve proper insulation coordination. Surge Arresters shall be provided with porcelain/ polymer housing fitted with pressure relief devices. A leakage current monitor with surge counter shall be provided with each surge arrester.

B.2.4 Protection Relaying and Control System

The protective relaying system proposed to be provided for transmission lines, auto-transformers, reactors and bus bars to minimize the damage to the equipment in the events of faults and abnormal conditions, is dealt in this section. All main protective relays shall be numerical type with IEC61850 communication interface and should have interoperability during integration of numerical relays to communicate over IEC 61850 protocol with RTU/SAS/IEDs of different OEMs. All numerical relays shall have built in disturbance recording feature.

The protection circuits and relays of transformer and reactor shall be electrically and physically segregated into two groups each being independent and capable of providing uninterrupted protection even in the event of one of the protection groups failing, to obtain redundancy, and to take protection systems out for maintenance while the equipment remains in service.

a) Transmission Lines Protection

765 kV lines shall have Main-I numerical three zone distance protection scheme with carrier aided inter-tripping feature. 765 kV lines shall also have Main-II numerical distance protection scheme like Main-I but from different make that of Main-I. The Main-I and Main-II protection relays of same make may be provided only if they are of different hardware and manufacturing platform or different principle of operation.

Further, all 765 kV lines shall be provided with single and three phase auto- reclosing facility to allow reclosing of circuit breakers in case of transient faults. These lines shall also be provided with distance to fault locators to identify the location of fault on transmission lines.

All 765 kV lines shall also be provided with two stages over voltage protection. Over voltage protection and distance to fault locator may be provided as in-built feature of Main-I and Main-II protection relays. Auto reclose as built-in function of Bay Control Unit (BCU) is also acceptable.

The Main-I and Main-II protection relays shall be fed from separate DC sources and shall be mounted in separate panels.

For 765 kV transmission lines, directional IDMT earth fault relay should be provided as standalone unit or in-built feature of Main-I and Main -II feature.

b) 765 kV Reactor Protection

Reactor shall be provided with the following protections:

i) Numerical Differential Protection.

ii) Numerical Restricted Earth Fault Protection

iii) Numerical Back-up impedance protection

Besides these, reactors shall also be provided with Buchholz relay, Magnetic Oil Gauge (MOG) with low oil level alarm, protection against oil and winding temperatures and pressure relief device, etc.

c) Bus bar Protection

The high-speed low impedance type bus bar differential protection, which is essential to minimize the damage and maintain system stability at the time of bus bar faults, shall be provided for 765 kV buses. Duplicated bus bar protection is envisaged for 765 kV bus-bar protection. Bus bar protection scheme shall be such that it operates selectively for each bus and incorporate necessary features required for ensuring security. The scheme shall have complete bus bar protection for present as well as envisaged future bays i.e. input / output modules for future bays for the bus section under the present scope shall also be provided.

Peripheral Units (PUs) shall be provided by the respective bay owners.

For existing substations, the existing bus bar protection shall be augmented as per requirement.

d) Local Breaker Back up Protection

This shall be provided for each 765 kV, circuit breakers and will be connected to de-energize the affected stuck breaker from both sides.

Notes:

1. *LBB and REF relays shall be provided separately from transformer differential relay.*
2. *LBB relay may also be provided as built-in protection function of distributed bus bar protection scheme; however in such case separate LBB relay shall be provided for tie bays (in case of One and Half breaker scheme).*
3. *Over fluxing and overload protection can be provided as built-in feature of differential relay.*
4. *In 765 kV switchyard, if spare bay of half diameter is identified as future, Tie CB relay panel shall be with Auto-reclosure feature.*

B.2.5 Substation Automation System

a) For all the new substations, state of art Substation Automation System (SAS) conforming to IEC-61850 shall be provided. The distributed architecture shall be used for Substation Automation system, where the controls shall be provided through Bay control units. The Bay control unit is to be provided bay wise for voltage level 220 kV and above. All Bay control units as well as protection units are normally connected through an Optical fibre high speed network. The control and monitoring of circuit breaker, dis-connector, re-setting of relays etc. can be done from Human Machine Interface (HMI) from the Control Room.

The functions of control, annunciation, disturbance recording, event logging and measurement of electrical parameters shall be integrated in Substation Automation System.

At new substations, the Substation Automation System (SAS) shall be suitable for operation and monitoring of the complete substation including proposed future bays/elements.

In existing substations with Substation Automation System (SAS), augmentation of existing SAS shall be done for bays under present scope.

In existing Substations where Substation automation is not provided, control functions shall be done through control panels.

Necessary gateway and modems (as required) shall be provided to send data to RLDC/SLDC as per their requirement and shall be provisioned with 2+2 redundancy i.e. 2 channels for Main Control Centre and 2 channels for Backup Control Centre. In order to meet this requirement, suitable redundancy at port and card level need to

be ensured by the TSP to avoid any single point of failure which may lead to interruption in real-time grid operation. Accordingly, all the hardware for communication services of station as stated above shall support dual redundancy for data transmission of station to respective main and backup RLDCs. Any augmentation work at RLDC/SLDC is excluded from TSP's scope. However, all the configuration work at substation end required to send data to RLDC/SLDC shall be in the scope of TSP.

b) Time Synchronization Equipment

Time synchronization equipment complete in all respect including antenna, cable and processing equipment required to receive time signal through GPS/NavIC or from National Physical Laboratory (NPL) through INSAT shall be provided at new substations. This equipment shall be used to synchronize SAS and IEDs etc.

B.3.0 Substation Support Facilities

Certain facilities required for the operation and maintenance of substations as described below shall be provided at new substation. In existing substation, these facilities have already been provided and will be extended/ augmented as per requirement.

B.3.1 Fire Fighting System

Fire-fighting system for substation including Transformer and Reactor shall conform to CEA (Measures Relating to Safety and Electric Supply) Regulations, 2023 as amended from time to time.

Further, adequate water hydrants and portable fire extinguishers shall be provided in the substations. The main header of the firefighting system shall be suitable for extension to bays covered under the future scope; necessary piping interface in this regard shall be provided.

Optical Beam type heat detection for GIS hall fire protection system shall be provided for all the GIS halls.

At existing substations, the fire-fighting systems as available shall be augmented/extended to meet the additional requirements.

B.3.2 Oil Evacuating, Filtering, Testing and Filling apparatus

To monitor the quality of oil for satisfactory performance of transformers, shunt reactors and for periodical maintenance necessary oil evacuating, filtering, testing

and filling apparatus would be provided at new substations. Oil storage tanks of adequate capacities for storage of transformer oil would be provided.

Online Transformer Oil Drying Out System shall be provided in line with the provisions of Standard Specification and Technical Parameters for Transformers and Reactors (66 kV and above Voltage Class) as amended up to date available on CEA's website.

B.3.3 Illumination

Normal and emergency AC and DC illumination shall be provided adequately in the control room and other buildings of the substation. The switchyard shall also be provided with adequate illumination.

The lighting of the entire control room building, fire-fighting pump house, other building (if any) and switchyard shall be done by LED based low power consumption luminaries.

B.3.4 Control Room

For the new substation, substation control room shall be provided to house substation work stations for station level control (SAS) along with its peripheral and recording equipment, AC and DC distribution boards, DC batteries and associated battery chargers, Fire Protection panels, Telecommunication panels and other panels as per requirements. Air conditioning shall be provided in the building as functional requirements. Main cable trenches from the control room shall have adequate space provision for laying of cables from the control room for all the future bays**.**

At existing substations, the adequacy of size of control room shall be ascertained and the same shall be augmented as per requirement.

B.3.5 GIS hall

The Gas Insulated Switchgear (GIS) of each voltage level along with other associated equipment shall be housed inside separate GIS building. The panels i.e. Bay level units, bay mimic, relay and protection panels, RTCC panels, PLCC panels, panels for tele-communication system etc. are to be placed in a separate room in the GIS building. The size of the room shall be such that all the panels for the bays under present scope shall be accommodated. The panel room shall be air-conditioned. Further, the temperature of the room shall be monitored through substation automation system by providing necessary temperature transducers. Ventilation system of suitable capacity shall be provided for each GIS hall. GIS hall shall be constructed/extended as per requirement

in such a way that its extension does not cause any hindrance to accommodate the bays of future expansion of substation.

One EOT Crane of suitable capacity for erection and maintenance of largest GIS component/assembly and all plant installed in the GIS switchgear room shall be provided in each GIS hall or suitably expand the existing crane arrangement. The crane shall be capable of fulfilling all special requirements for erection and maintenance of GIS equipment. The capacity of the crane shall be sized to lift the heaviest GIS switchgear component.

B.3.6 Control Concept

All the EHV circuit breakers in substation/switching stations shall be controlled and synchronized from the switchyard control room/remote control center. All the isolators shall have control from remote/local whereas the earth switches shall have local control only.

B.3.7 Visual Monitoring System (VMS) for watch and ward of substation premises:

Visual monitoring system for effective watch and ward of substation premises shall cover all the transformers and reactors, all other major AIS Equipment (such as CB, isolators, CT, CVT, SA etc. as applicable), GIS bays, panel room, all the gates of switchyard and all entry and exit points of control room building and accordingly the location of cameras shall be decided. In addition to the gates of the switchyard, the cameras shall also be located around the boundaries at suitable locations. The camera shall be high-definition color CCD camera with night vision feature. The VMS data partly/completely shall be recorded (minimum for 15 days) at least @25fps (or better) and stored on network video recorder. The system shall use video signals from various cameras installed at different locations, process them for viewing on workstations/monitors in the control room and simultaneously record all the cameras. The VMS data should go only to the intended personnel/facility and not to the remote server of the Camera (VMS supplier).

Mouse/keyboard controllers shall be used for pan, tilt, zoom and other functions of the desired camera. The Visual Monitoring System shall have provision of WAN connectivity for remote monitoring.

All camera recordings shall have Camera ID and location/area of recording as well as date/time stamp. The equipment should generally conform to Electromagnetic compatibility requirement for outdoor equipment in EHV substation.

Advisory on deployment of CCTV issued by Ministry of Electronics and Information Technology (MEITY) shall be followed.

At existing substations, the Visual Monitoring System if available shall be augmented as per existing or better specification as required.

B.4 General Facilities

a) Line Gantry/Towers are envisaged for bays under the present scope only. However, for adjacent future line bay, gantry/tower shall be designed for extension (considering Hexa conductors for 765 kV and Quad conductors for 400 kV and Twin conductor for 220 kV future lines) wherever applicable.

b) Bay extension works at existing substation shall be executed by TSP in accordance with the requirement/provisions mentioned above. However, interface points shall be considered keeping in view the existing design/arrangement at the substation.

c) TSP has to arrange for construction power and water on its own.

d) All outdoor steel structures including anchor/foundation bolts shall be fully galvanized. The weight of the zinc coating shall be at least 610 g/m^2, however, for coastal/creek regions it shall be at least 900 g/m^2.

e) In 765 kV switchyard, if spare bay of half diameter is identified as future, all the equipment for Tie and Future Bay shall be designed considering the current rating of line bay i.e. 3150 A.

f) All electrical equipment shall be installed above the Highest Flood Level (HFL) and where such equipment is not possible to be installed above Highest Flood Level, it shall be ensured that there is no seepage or leakage or logging of water.

g) As per CEA (Technical Standards for Construction of Electrical Plants and Electric Lines) Regulations 2022 and CEA Manual on Transmissions Planning criteria 2023, line approaching substation shall normally be perpendicular to the substation boundary for a stretch of 2-3 km. Accordingly, TSP shall ensure that line terminations at substations are arranged in a manner to avoid hindrance to future line terminations at the substations.

B.5 EXTENSION OF EXISTING SUBSTATION

The following drawings/details of existing substation is attached with the RFP documents for further engineering by the bidder.

S. No.	Drawing Title	Drawing No./Details	Rev. No.
A.	**765 kV Angul AIS S/s**		
1.0	Single Line Diagram	C/ENGG/ER/ANGUL/EXTN./SLD/SR-ER/01	00
2.0	General Arrangement	C/ENGG/ER/ANGUL/EXTN./GA/SR-ER/01	00
3.0	Earthmat Layout	(0)-G71770-AB173-L163-002	0
4.0	Visual Monitoring System (VMS)	Del-VMS-ANG-765/400-001	1
5.0	Bus Bar Protection	Make : Siemens; Model: 7SS525 BU & 7SS522 MCU	
6.0	Substation Automation System (SAS)	Make : Siemens; Model: PAS & WinCC	

Sl. No.	Drawing Title	Drawing No./Details	Rev. No.
A.	**765 kV Srikakulam GIS S/s**		
1.0	Single Line Diagram	SLD/Srikakulam/00	
2.0	General Arrangement	GA/Srikakulam/00	
3.0	Earthmat Layout		
4.0	Visual Monitoring System (VMS)		
5.0	Bus Bar Protection		
6.0	Substation Automation System (SAS)		

Note: The existing drawings provided above and in subsequent amendments to the RfP are as received from the developer of existing substation and provided only for reference. Bidders shall follow the RfP for scope of work. Actual site conditions may be different due to other schemes being executed or subsequent revisions by the developer. Thus, Bidders are advised to visit the substation sites and acquaint themselves with the actual site conditions, layout, topography, infrastructure such as the requirement of roads, cable trench, drainage, space availability in control rooms and LT panel room, boundary etc. and also the design philosophy.

SPECIFIC TECHNICAL REQUIREMENTS FOR COMMUNICATION

The communication requirement shall be in accordance to CEA (Technical Standards for Communication System in Power System Operations) Regulations, 2020, CEA (Technical Standards for Construction of Electrical Plants and Electric Lines) Regulations, 2022, CERC (Communication System for inter-State transmission of electricity) Regulations, 2017, CEA (Cyber Security in Power Sector) Guidelines, 2021, CEA Guidelines on Unified Philosophy for placement of PMUs in Indian Grid, March 2025 and all above documents as amended from time to time.

The communication services viz. SCADA, AGC (wherever applicable), VoIP, AMR and PMU have been identified as critical services and therefore shall be provisioned with 2+2 redundancy i.e. 2 channels for Main Control Centre and 2 channels for Backup Control Centre. In order to meet this requirement, suitable redundancy at port and card level need to be ensured by the TSP to avoid any single point of failure which may lead to interruption in real-time grid operation.
PMU to PDC communication (wherever required) shall be through 2 channels to the PDC (main) as there is no backup PDC at present.

Accordingly, all the hardware for communication services of station as stated above shall support dual redundancy for data transmission of station to respective main and backup RLDCs

The complete ISTS communication system commissioned by TSP under the RFP shall be the asset of ISTS and shall be available for usage of ISTS requirements as suggested by CTU from time to time.

In order to meet the requirement for grid management and operation of substations, Transmission Service Provider (TSP) shall provide the following**:**

C.1.0 FOTE Requirement for 2 Nos. of 765 kV GIS line bays at Srikakulam S/s.

(I) TSP shall supply, install & commission FODP with minimum 144 Fiber capacity along with panel and approach Cable (48F each) with all associated hardware fittings from gantry tower to Control Room for all the incoming lines envisaged under the present scope.

(II) TSP shall supply, install & commission One STM-16 (FOTE) equipment alongwith panel/s supporting minimum Three (3) directions with MSP (Multiplex Section Protection – 1+1). Communication Equipment shall be provided with necessary interfaces to meet the voice and data communication requirement among

Angul & Srikakulam and local patching with control room FOTE. The suitable DC Power Supply and backup to be provided for communication equipment.

(III) FOTE/FODP panel shall be installed in the new Bay Kiosk/Switchyard Panel Room (SPR)/Relay panel Room. The FOTE under present scope shall be integrated by TSP with the existing FOTE at control room of Srikakulam S/s which shall be communicating with respective control center. TSP to provide necessary FODP sub rack / Splice trays/ Patch cords etc. and optical interfaces/equipment in the existing FOTE/FODP panels in control room for integration with the existing FOTE for onwards data transmission.

In case spare optical direction is not available in the existing FOTE at the control room, the TSP shall coordinate with station owner to reconfigure the directions in existing FOTE at control room. Alternatively, The TSP may integrate the FOTE under the present scope with existing FOTE in the nearby Kiosk connected to the control room FOTE (if available with spare direction). For this purpose, TSP shall provide necessary FODP sub rack / Splice trays/ Patch cords etc. and suitable optical interfaces/ equipment in the existing FOTE/FODP panels in another Kiosk (SPR).

(IV) FOTE & FODP Eq can be accommodated in same panel to optimize space.

(V) The maintenance of all the communication equipment and software thereof including FOTE, FODP, PMU, approach cable, DCPS alongwith Battery Bank & Firewall shall be the responsibility of TSP.

C.2.0 FOTE Requirement for 2 Nos. of 765 kV AIS line bays at Angul.

(I) TSP shall supply, install & commission FODP with minimum 144 Fiber capacity along with panel and approach Cable (48F each) with all associated hardware fittings from gantry tower to Control Room for all the incoming lines envisaged under the present scope.

(II) TSP shall supply, install & commission One STM-16 (FOTE) equipment along with panel/s supporting minimum Three (3) directions with MSP (Multiplex Section Protection – 1+1). Communication Equipment shall be provided with necessary interfaces to meet the voice and data communication requirement among Angul & Srikakulam and local patching with control room FOTE. The suitable DC Power Supply and backup to be provided for communication equipment.

(III) FOTE/FODP panel shall be installed in the new Bay Kiosk (Switchyard Panel Room (SPR)). The FOTE under present scope shall be integrated by TSP with the existing FOTE at control room of Angul S/s which shall be communicating with respective control center. TSP to provide necessary FODP sub rack / Splice trays/ Patch cords etc. and optical interfaces/equipment in the existing FOTE/FODP

panels in control room for integration with the existing FOTE for onwards data transmission.

In case spare optical direction is not available in the existing FOTE at the control room, the TSP shall coordinate with station owner to reconfigure the directions in existing FOTE at control room. Alternatively, The TSP may integrate the FOTE under the present scope with existing FOTE in the nearby Kiosk connected to the control room FOTE (if available with spare direction). For this purpose, TSP shall provide necessary FODP sub rack / Splice trays/ Patch cords etc. and suitable optical interfaces/ equipment in the existing FOTE/FODP panels in another Kiosk (SPR).

(IV) FOTE & FODP Eq can be accommodated in same panel to optimize space.

(V) The maintenance of all the communication equipment and software thereof including FOTE, FODP, PMU, approach cable, DCPS alongwith Battery Bank & Firewall shall be the responsibility of TSP.

C.3.0 Angul – Srikakulam 765 kV 2nd D/C line

(I) On Angul – Srikakulam 765 kV 2nd D/C line, TSP shall supply, install & commission One (1) no. OPGW cable containing 48 Fibres (48F) on one E/W peak and conventional earth wire on other E/W peak.

(II) The TSP shall install this OPGW from gantry of Angul S/s up to the gantry of Srikakulam S/s with all associated hardware including Vibration Dampers, mid-way gantry & Joint Boxes (called **OPGW Hardware** hereafter) and finally terminate in Joint Boxes at end Substations. The transmission line length is **275 kms (approx.)**, where repeater may be required to meet the link budget requirement of Angul – Srikakulam link. The same shall be provided by TSP.

(III) TSP shall finalize the location of repeater station depending upon the actual site conditions. Further TSP shall comply to the requirements mentioned as per **Appendix-F.1**

(IV) Maintenance of OPGW Cable & OPGW Hardware shall be responsibility of TSP.

C.4.0 Specific Requirement for Phasor Measurement Units (PMUs)

TSP shall supply, install and commission required No. of Phasor Measurement Units (PMUs) as per the "Guidelines on Unified Philosophy for placement of PMUs in Indian Grid" issued vide CEA letter No. CEA-PS-14-12/9/2024-PSETD Division dated 19.03.2025 for the scope of this RFP. The PMUs shall be provided with LAN switch

and shall connect with LAN switch of control room of respective substations/ generating stations with Fibre Optic cable. The PMUs shall be connected with the FOTE at Substation/ generating stations for onwards data transmission to the PDC (Phasor Data Concentrator) located at respective RLDC. Configuration work in existing PDC at RLDC for new PMU integration shall be done by respective RLDC, however all the necessary support in this regard shall be ensured by TSP. The maintenance of all the PMUs and associated equipment shall be the responsibility of TSP.

Note: Existing Station owner/s to provide necessary support to integrate different equipment and applications of new extended bays with the existing substation e.g. Communication (through FOTE), Voice etc. for smooth operation and monitoring of new added grid elements.

C.5.0 Specific Requirement for UNMS Integration of FOTE

Communication system integration in UNMS/CSMS

TSP is to ensure integration of communication system into UNMS/CSMS as per following:

"The new communication equipment/ system under the present scope shall be compatible for integration with existing regional level NMS system/ Centralized Supervision & Monitoring System (CSMS) i.e. Regional UNMS. The local configuration of the new communication equipment/ system at the station end shall be the responsibility of TSP as per followings. The configuration work in the existing centralized NMS/ UNMS at Control center end, for integration of new Communication equipment/ system shall be done by Regional ULDC Team/ NMT, however all the necessary support in this regard shall be ensured by TSP.

Requirement for integration of Communication Equipment/ system with Regional UNMS:

1. TSP shall ensure that NMS/EMS/NE supplied by them is NBI compliant and all FCAPS functionality is supported in the NBI such as NE Inventory, Hardware Inventory– Shelf/Slot/Card/SFP/Port, Topology, Protections, Alarms, Performance-real time & periodic, Performance KPI parameters (E-1, STM, Ethernet), Remote Configuration, Cross Connects, Trails & Circuits, Services Provisioning (NE), E-1, STM, Ethernet, TX & RX Trace, loop back and details are published in the NBI guide for the configuration parameters.

2. TSP shall be obliged to provide/share all necessary documentations such as NBI Guide/MIB/IDL/WSDL/API files etc. for onward integration of their NMS/EMS/NE with regional UNMS.

3. The following support shall be provided by TSP for integration of their supplied equipment with regional UNMS:
    - Enabling & activating NBI license in their EMS/NMS and providing NBI login access along with User credentials
    - Assist in verifying NBI Connectivity with UNMS vendor for the successful communication and retrieval of data.
    - Assist in` troubleshooting (if required) for NBI connectivity along with UNMS vendor for the communication and retrieval of data.
4. For standalone NE which is not integrated with any EMS/NMS, TSP shall provide modality of complete FCAPS data acquisition as above through industry standard programmatic methods and provide the CLI command manual."

Appendix-F.1

Repeater Requirements

- If the repeater location is finalized in the Control Room of a nearby substation, TSP shall provide OPGW to accommodate all the fibers in main transmission line on a single Earth wire peak with OPGW Hardware & mid-way Joint Boxes etc. of the line crossing the main line and required approach Cable to accommodate all the OPGW fibers with all associated hardware fittings, to establish connectivity between crossing point of main transmission line up to the repeater equipment in substation control room.

  TSP shall co-ordinate for Space & DC power supply sharing for repeater equipment.

  TSP shall provide FODP, FOTE (with STM-16 capacity) with suitable interfaces required for link budget of respective link.

OR

- If the repeater location is finalized in the nearby substation premises, the TSP shall identify the Space for repeater shelter in consultation with station owner. Further TSP shall provide OPGW to accommodate all the fibers in main transmission line on a single Earthwire peak with OPGW Hardware & mid-way Joint Boxes etc. of the line crossing the main line and required approach Cable/UGFO to accommodate all the OPGW fibers with all associated hardware fittings, to establish connectivity between crossing point of main transmission line up to the substation where the repeater shelter is to be housed.

TSP shall provide repeater shelter along with FODP, FOTE (with STM-16 capacity) with suitable interfaces require for link budget of respective link, reliable power supply provisioning for AC and DC supply, battery bank, Air Conditioner and other associated systems.

OR

- If the repeater location is finalized on land near the transmission tower. TSP shall make the provisions for Land at nearby tower for repeater shelter. Further TSP shall provide required approach Cable to accommodate all the OPGW fibers with all associated hardware fittings to establish connectivity up to the location of repeater shelter.

TSP shall provide repeater shelter along with FODP, FOTE (with STM-16 capacity) with suitable interfaces require for link budget of respective link, reliable power supply provisioning for AC and DC supply, battery bank, Air Conditioner and other associated systems

Maintenance of OPGW Cable and **OPGW Hardware**, repeater equipment & items associated with repeater shelter shall be responsibility of TSP.

Proposed Communication for " **Inter-Regional Strengthening between SR Grid and ER Grid** "

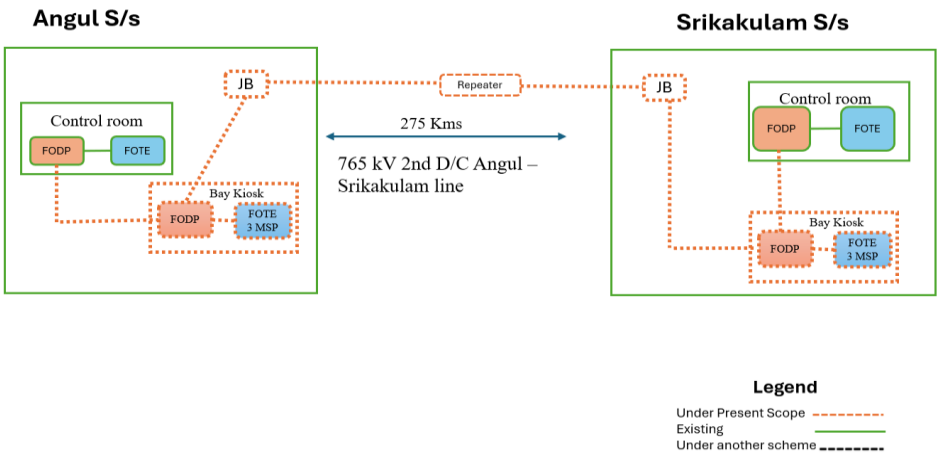

Figure F.1

C.6.0 PLCC and PABX:

Power line carrier communication (PLCC) equipment complete for speech, tele-protection commands and data channels shall be provided on each transmission line. The PLCC equipment shall in brief include the following: -

(i) Coupling device, Coupling filters line traps, carrier terminals, protection couplers, HF cables, PABX (if applicable) and maintenance and testing instruments.

(ii) At new substation, a telephone exchange (PABX) of 24 lines shall be provided at as means of effective communication among various buildings of the substation, remote end substations and with control centres (RLDC/ SLDC) etc.

(iii) Coupling devices shall be suitable for phase-to-phase coupling for 400 kV Transmission lines. The pass band of coupling devices shall have sufficient margin for adding communication channel in future if required. Necessary protection devices for safety of personnel and low voltage part against power frequency voltages and transient over voltage shall also be provided.

(iv) The line traps shall be broad band tuned suitable for blocking the complete range of carrier frequencies. Line Trap shall have necessary protective devices such as lightning arresters for the protection of tuning device. Decoupling network consisting of line traps and coupling capacitors may also be required at certain substation in case of extreme frequency congestion.

(v) The carrier terminals shall be of single side-band (SSB) amplitude modulation (AM) type and shall have 4 kHz band width. PLCC Carrier terminals and Protection couplers shall be considered for both ends of the line.

(vi) PLCC equipment for all the transmission lines covered under the scheme shall be provided by TSP. PLCC to be provided for following lines under present scope:

S. No.	Line name	PLCC configuration
1	**Angul - Srikakulam 2nd 765 kV D/C line**	1 set Analog PLCC + 1 set Digital Protection Coupler for each circuit at both ends.

(vii) Further, CVT and Wave trap for all 765 kV line bays under present scope shall be provided by TSP.

(viii) All other associated equipment like cabling, coupling device and HF cable shall also be provided by the TSP.

(ix) Two (2) sets of 48 V battery banks for PLCC and communication equipment shall be provided at each new Substation with at least 10-hour battery backup and extended backup, if required.

Transmission Service Agreement

Schedule: 2

Scheduled COD

[Note: As referred to in the definition of "Element", "Scheduled COD", and in Articles 3.1.3 (c), 4.1 (b) and 4.3 (a) of this Agreement]

S. No.	Name of the Transmission Element	Scheduled COD as per Gazette Notification	% of Quoted Transmission Charges recoverable on Scheduled COD of the Element of the Project	Element(s) which are pre-required for declaring the commercial operation (COD) of the respective Element
1.	Angul – Srikakulam 765 kV 2nd D/C line with 240 MVAr SLR at both ends on both circuits	30 months	97.5	-
2.	1x330 MVAr, 765 kV bus reactor (3rd) at Angul Substation		2.5	-

Transmission Service Agreement

Schedule: 3

Safety Rules and Procedures

[Note: As referred to in Articles 5.6 of this Agreement]

1. **Site Regulations and Safety:**

The TSP shall establish Site regulations within sixty (60) days from fulfilment of conditions subsequent, as per Prudent Utility Practices setting out the rules to be observed till expiry of the Agreement at the Site and shall comply therewith.

Such Site regulations shall include, but shall not be limited to, rules in respect of security, safety of the Project, gate control, sanitation, medical care, and fire prevention, public health, environment protection, security of public life, etc.

Copies of such Site regulations shall be provided to the Nodal Agency and the CEA for the purpose of monitoring of the Project.

2. **Emergency Work:**

In cases of any emergency, the TSP shall carry out all necessary remedial work as may be necessary.

If the work done or caused to be done by any entity, other than the TSP, the TSP shall, reimburse the actual costs incurred, to the other Party carrying out such remedial works.

3. **Site Clearance:**

In the course of execution of the Agreement, the TSP shall keep the Site reasonably free from all unnecessary obstruction, storage, remove any surplus materials, clear away any wreckage, rubbish and temporary works from the Site, and remove any equipment no longer required for execution of the Agreement. After completion of all Elements of the Project, the TSP shall clear away and remove all wreckage, rubbish and debris of any kind from the Site, and shall leave the Site clean and safe.

4. **Watching and Lighting:**

The TSP shall provide and maintain at its own expense all lighting, fencing, and watching when and where necessary for the proper construction, operation, maintenance / repair of any of the Elements of the Project, or for the safety of the owners and occupiers of adjacent property and for the safety of the public, during such maintenance / repair.

Schedule: 4

Computation of Transmission Charges

1.1 General

The Monthly Transmission Charges to be paid to the TSP for providing Transmission Service for any Contract Year during the term of the Agreement shall be computed in accordance with this Schedule and paid as per Sharing Regulations.

Illustration regarding payment of Transmission Charges under various scenarios (considering definitions of Contract Year, Expiry Date & Monthly Transmission Charges above) is as below: -

Illustration-1: In case the Project Elements achieve COD as per Schedule

Quoted Transmission Charges: **Rs. 140 Million**

Completion Schedule:

Element No.	**Completion Schedule in Months**	**Scheduled CoD of the Element**	**Actual CoD of the Element**	**% Charges recoverable on Scheduled CoD of the Element**
Element 1	28	1-Feb-2018	1-Feb-2018	25%
Element 2	38	1-Dec-2018	1-Dec-2018	75%

Tariff Payable as follows:

Illustration-2: In case of extension of Scheduled COD as per Article 4.4.1 & 4.4.2 of this Agreement

Quoted Transmission Charges: **Rs. 140 Million**

Completion Schedule:

Element No.	Completion Schedule in Months	Scheduled CoD of the Element	Actual CoD of the Element	% Charges recoverable on Scheduled CoD of the Element
Element 1	20	1-Feb-2018	1-Jul-2018	25%
Element 2	28	1-Oct-2018	1-Dec-2018	75%

Transmission Charges for Element 1			**Transmission Charges for Element 2**		
1-Feb-18 to 31-Mar-18	140 X 25% X ((28+31)/365)	5.65		--	0.00
1-Apr-18 to 30-Nov-18	140 X 25% X (244/365)	23.39		--	0.00
1-Dec-18 to 31-Mar-19	140 X 100% X (121/365)				46.41
2	140 X 100% X 1				140
3	140 X 100% X 1				140
4	140 X 100% X 1				140
5	140 X 100% X 1				140
…….					
…….					
36 (1-Apr to 30-Nov)	140 X 100% X (244/365)				93.59

Tariff Payable as follows:

Transmission Charges for Element 1			**Transmission Charges for Element 2**		
1-Feb-18 to 31-Mar-18	--	0.00		--	0.00
1-Apr-18 to 30-Jun-18	--	0.00		--	0.00
1-Jul-18 to 30-Nov-18	140 X 25% X (153/365)	14.67		--	0.00
1-Dec-18 to 31-Mar-19	140 X 100% X (121/365)				46.41
2	140 X 100% X 1				140
3	140 X 100% X 1				140
4	140 X 100% X 1				140
5	140 X 100% X 1				140
…….					
…….					
36 (1-Apr to 30-Nov)	140 X 100% X (244/365)				93.59

Illustration-3: In case of delay in achieving COD of Project & all individual Elements (COD of the Project achieved in Contract Year 1)

Quoted Transmission Charges: **Rs. 140 Million**

Completion Schedule:

Element No.	Completion Schedule in Months	Scheduled CoD of the Element	Actual CoD of the Element	% Charges recoverable on Scheduled CoD of the Element
Element 1	20	1-Feb-2018	1-Dec-2018	25%
Element 2	28	1-Oct-2018	1-Dec-2018	75%

Tariff Payable as follows:

Transmission Charges for Element 1			**Transmission Charges for Element 2**		
1-Feb-18 to 31-Mar-18	--	0.00		--	0.00
1-Apr-18 to 30-Sept-18	--	0.00		--	0.00
1-Oct-18 to 30-Nov-18	--	0.00	1-Oct-18 to 30-Nov-18	--	0.00
1-Dec-18 to 31-Mar-19	140 X 100% X (121/365)				46.41
2	140 X 100% X 1				140
3	140 X 100% X 1				140
4	140 X 100% X 1				140
5	140 X 100% X 1				140
…….					
……..					
36 (1-Apr to 30-Nov)	140 X 100% X (244/365)				93.59

Illustration-4: In case of delay in achieving COD of Project & all individual Elements (COD of the Project achieved in Contract Year other than Contact Year 1)

Quoted Transmission Charges: **Rs. 140 Million**

Completion Schedule:

Element No.	Completion Schedule in Months	Scheduled CoD of the Element	Actual CoD of the Element	% Charges recoverable on Scheduled CoD of the Element
Element 1	38	1-Oct-2019	1-May-2020	25%
Element 2	38	1-Oct-2019	1-May-2020	75%

Tariff Payment to be paid as:

Transmission Charges for Element 1			**Transmission Charges for Element 2**		
1-Oct-19 to 31-Mar-20	--	0.00	1-Oct-19 to 31-Mar-20	--	0.00
1-Apr-20 to 30-Apr-20	-	0.00	1-Apr-20 to 30-Apr-20	-	0.00
1-May-20 to 31-Mar-21	140 X 100% X (335/365)				128.49
2	140 X 100% X 1				140
3	140 X 100% X 1				140
4	140 X 100% X 1				140
5	140 X 100% X 1				140
…….					
……..					
36 (1-Apr to 30-Apr)	140 X 100% X (30/ 365)				11.51

<u>Illustration5: In case of delay in achieving COD of Element but Project COD achieved on time</u>

Quoted Transmission Charges: **Rs. 140 Million**

Completion Schedule:

Element No.	Completion Schedule in Months	Scheduled CoD of the Element	Actual CoD of the Element	% Charges recoverable on Scheduled CoD of the Element
Element 1	20	1-Feb-2018	1-Jul-2018	25%
Element 2	30	1-Dec-2018	1-Dec-2018	75%

Tariff Payable as follows:

Transmission Charges for Element 1			**Transmission Charges for Element 2**		
1-Feb-18 to 31-Mar-18	--	0.00		--	0.00
1-Apr-18 to 30-Jun-18	--	0.00		--	0.00
1-Jul-18 to 30-Nov-18	140 X 25% X (153/365)	14.67		--	0.00
1-Dec-18 to 31-Mar-19	140 X 100% X (121/365)				46.41
2	140 X 100% X 1				140
3	140 X 100% X 1				140
4	140 X 100% X 1				140
5	140 X 100% X 1				140
…….					
……..					
36 (1-Apr to 30-Nov)	140 X 100% X (244/365)				93.59

<u>Illustration-6: In case of early commissioning of Project</u>

Quoted Transmission Charges: **Rs. 140 Million**

Completion Schedule:

Element No.	Completion Schedule in Months	Scheduled CoD of the Element	Actual CoD of the Element	% Charges recoverable on Scheduled CoD of the Element
Element 1	38	1-Oct-2019	1-Jul-2019	25%
Element 2	38	1-Oct-2019	1-Jul-2019	75%

Tariff Payment to be paid as:

Transmission Charges for Element 1		**Transmission Charges for Element 2**
1-July-19 to 31-Mar-20	140 X 100% X (274/365)	105.09
2	140 X 100% X 1	140
3	140 X 100% X 1	140
4	140 X 100% X 1	140
5	140 X 100% X 1	140
…….		
……..		
36 (1-Apr to 30-Jun)	140 X 100% X (91/365)	34.91

Illustration-7: In case of early commissioning of an element

Quoted Transmission Charges: **Rs. 140 Million**
Completion Schedule:

Element No.	Completion Schedule in Months	Scheduled CoD of the Element	Actual CoD of the Element	% Charges recoverable on Scheduled CoD of the Element
Element 1	38	1-Oct-2019	1-Apr-2019	25%
Element 2	38	1-Jul-2019	1-Jul-2019	75%

Tariff Payment to be paid as:

Transmission Charges for Element 1			**Transmission Charges for Element 2**		
1-Apr-2019 to 30-Jun-19	140 X 25% X (91/365)	8.72	1-Apr-2019 to 30-Jun-19	--	0.00
1-July-19 to 31-Mar-20	140 X 100% X (274/ 365)				105.09
2	140 X 100% X 1				140
3	140 X 100% X 1				140
4	140 X 100% X 1				140
5	140 X 100% X 1				140
…….					
……..					
36 (1-Apr-30-Jun)	140 X 100% X (91/365)				34.91

The Transmission Charges shall be payable on monthly basis as computed above.

1.2 Computation of Monthly Transmission Charges

The Monthly Transmission Charges for any month m in a Contract Year n shall be calculated as below:

For AC System:

a. If Actual Transmission System Availability for the month m of contract year n is greater than or equal to 98% and less than or equal to 98.5%;

   Monthly Transmission Charges MTC(m) = Tmn *1

a. If Actual Transmission System Availability for the month m of contract year n exceeds 98.5% and less than or equal to 99.75%;

Monthly Transmission Charges MTC(m) = Tmn * (AA/ 98.5%)

c. If Actual Transmission System Availability for the month m of contract year n is greater than 99.75%;

Monthly Transmission Charges MTC(m) = Tmn * (99.75% / 98.5%)

d. If Actual Transmission System Availability for the month m of contract year n is less than 98%and greater than or equal to 95.00%;

Monthly Transmission Charges MTC(m) = Tmn * (AA/ 98%)

e. If Actual Transmission System Availability for the month m of contract year falls below 95%;

Monthly Transmission Charges MTC(m) = Tmn * (AA/ 98%) - 0.02 * (Tmn * (AA/ 95%)

For DC System:

a. If Actual Transmission System Availability for the month m of contract year n is greater than or equal to 95% and less than or equal to 96%;

Monthly Transmission Charges MTC(m) = Tmn *1

b. If Actual Transmission System Availability for the month m of contract year n exceeds 96% and less than or equal to 99.75%;

Monthly Transmission Charges MTC(m) = Tmn * (AA/ 96%)

c. If Actual Transmission System Availability for the month m of contract year n is greater than 99.75%;

Monthly Transmission Charges MTC(m) = Tmn * (99.75% / 96%)

d. If Actual Transmission System Availability for the month m of contract year n is less than 95% and greater than or equal to 92.00%;

Monthly Transmission Charges MTC(m) = Tmn * (AA/ 95%)

e. If Actual Transmission System Availability for the month m of contract year falls below 92%;

Monthly Transmission Charges MTC(m) = Tmn * (AA/ 95%) - 0.02 * (Tmn * (AA/ 92%)

where:

- AA is the actual Availability, as certified by RPC, as per procedure provided in Schedule 6.
- m is the month in Contract Year ‘n’
- Tmn= Transmission Charges for the month ‘m’ in Contract Year ‘n’ = (=Transmission Charge/ no. of days in the Year n)* no. of days in month m

Provided, no Transmission Charges shall be paid during the period for which the RLDC has not allowed the operation of the Element/Project due to the failure of the TSP to operate it as per the provisions of the Grid Code.

1.3 RLDC Fee & Charges

The payment of RLDC fee & charges, in accordance with relevant regulations of CERC, shall be the responsibility of the TSP.

Schedule: 5

Quoted Transmission Charges

[Quoted Transmission Charges from Annexure - 21 of the RFP of the Selected Bidder to be inserted here]

[To be incorporated from the Bid of the Selected Bidder submitted during the e-reverse auction after its selection]

Quoted Transmission Charges: Rs. …… Million

Proportionate Transmission Charges payable for each Element of the Project:

S. No.	Name of the Transmission Element	Scheduled COD as per Gazette Notification	% of Quoted Transmission Charges recoverable on Scheduled COD of the Element of the Project	Element(s) which are pre-required for declaring the commercial operation (COD) of the respective Element
1.	Angul – Srikakulam 765 kV 2nd D/C line with 240 MVAr SLR at both ends on both circuits	30 months	97.5	-
2.	1x330 MVAr, 765 kV bus reactor (3rd) at Angul Substation		2.5	-

Schedule: 6

Appendix –IV to Central Electricity Regulatory Commission (Terms and Conditions of Tariff) Regulations, 2024

Procedure for Calculation of Transmission System Availability Factor for a Month

1. Transmission system availability factor for nth calendar month ("TAFPn") shall be calculated by the respective transmission licensee, verified by the concerned Regional Load Dispatch Centre (RLDC) and certified by the Member-Secretary, Regional Power Committee of the region concerned, separately for each AC and HVDC transmission system and grouped according to sharing of transmission charges. In the case of the AC system, transmission System Availability shall be calculated separately for each Regional Transmission System and inter-regional transmission system. In the case of the HVDC system, transmission System Availability shall be calculated on a consolidated basis for all inter-state HVDC systems.

2. Transmission system availability factor for nth calendar month ("TAFPn") shall be calculated by considering the following:

   i) **AC transmission lines**: Each circuit of AC transmission line shall be considered as one element;

   ii) **Inter-Connecting Transformers (ICTs):** Each ICT bank (three single- phase transformers together) shall form one element;

   iii) **Static VAR Compensator (SVC):** SVC, along with SVC transformer, shall form one element;

   iv) **Bus Reactors or Switchable line reactors:** Each Bus Reactors or Switchable line reactors shall be considered as one element;

   v) **HVDC Bi-pole links:** Each pole of the HVDC link, along with associated equipment at both ends, shall be considered as one element;

   vi) **HVDC back-to-back station:** Each block of the HVDC back-to-back station shall be considered as one element. If the associated AC line (necessary for the transfer of inter-regional power through the HVDC back-to-back station) is not available, the HVDC back-to-back station block shall also be considered unavailable;

   vii) **Static Synchronous Compensation ("STATCOM"):** Each STATCOM shall be considered as a separate element.

3. The Availability of the AC and HVDC portion of the Transmission system shall be calculated by considering each category of transmission elements as under:

TAFPn (in %) for AC system:

$$= \frac{(o \times AVo)+(p \times AVp) + (q \times AVq) + (r \times AVr)+(u \times AVu)}{(o + p + q + r+u)} \times 100$$

Where,

o	=	Total number of AC lines.
AVo	=	Availability of o number of AC lines
p	=	Total number of bus reactors/switchable line reactors
AVp	=	Availability of p number of bus reactors/switchable line reactors
q1	=	Total number of ICTs
AVq	=	Availability of q number of ICTs
r	=	Total number of SVCs
AVr	=	Availability of r number of SVCs
u	=	Total number of STATCOM
AVu	=	Availability of u number of STATCOM

TAFMn (in %) for HVDC System:

$$= \frac{\sum_{x=1}^{s} Cxbp\ (act) \times AVxbp + \sum_{y=1}^{t} Cy\ (act)btb \times AVybtb}{\sum_{x=1}^{s} Cxbp + \sum_{y=1}^{t} Cy\ btb} \times 100$$

Where

Cxbp(act)	=	Total actual operated capacity of xth HVDC pole
Cxbp	=	Total rated capacity of xth HVDC pole
AVxbp	=	Availability of xth HVDC pole
Cybtb(act)	=	Total actual operated capacity of yth HVDC back-to-back station block
Cybtb	=	Total rated capacity of yth HVDC back-to-back station block
AVybtb	=	Availability of yth HVDC back-to-back station block
s	=	Total no of HVDC poles
t	=	Total no of HVDC Back to Back blocks

4. The availability for each category of transmission elements shall be calculated based on the weightage factor, total hours under consideration and non-available hours for each element of that category. The formulae for calculation of the Availability of each category of the transmission elements are as per **Appendix-V**. The weightage factor for each category of transmission elements shall be considered as under:

    (a) For each circuit of the AC line – The number of sub-conductors in the line multiplied by ckt-km;

    (b) For each HVDC pole- The rated MW capacity x ckt-km;

    (c) For each ICT bank – The rated MVA capacity;

    (d) For SVC- The rated MVAr capacity (inductive and capacitive);

    (e) For Bus Reactor/switchable line reactors – The rated MVAr capacity;

    (f) For HVDC back-to-back stations connecting two Regional grids- Rated MW capacity of each block; and

    (g) For STATCOM – Total rated MVAr Capacity.

5. The transmission elements under outage due to the following reasons shall be deemed to be available:

    i. Shut down availed for maintenance of another transmission scheme or construction of new element or renovation/upgradation/additional capitalization in an existing system approved by the Commission. If the other transmission scheme belongs to the transmission licensee, the Member Secretary, RPC may restrict the deemed availability period to that considered reasonable by him for the work involved. In case of a dispute regarding deemed availability, the matter may be referred to the Chairperson, CEA, within 30 days.

    ii. Switching off of a transmission line to restrict over-voltage and manual tripping of switched reactors as per the directions of the concerned RLDC.

    iii. Shut down of a transmission line due to the Project(s) of NHAI, Railways and Border Road Organization, including for shifting or modification of such transmission line or any other infrastructure project approved by Ministry of Power. Member Secretary, RPC may restrict the deemed availability period to that considered reasonable by him for the work involved; Provided that apart from the deemed availability, any other costs involved in the process of such shutdown of transmission line shall not be borne by the DICs.

    Provided that such deemed availability shall be considered only for the period for which DICs are not affected by the shutdown of such transmission line.

6. For the following contingencies, the outage period of transmission elements, as certified by the Member Secretary, RPC, shall be excluded from the total time of the element under the period of consideration for the following contingencies:

   i) Outage of elements due to force majeure events beyond the control of the transmission licensee. However, whether the same outage is due to force majeure (not design failure) will be verified by the Member Secretary, RPC. A reasonable restoration time for the element shall be considered by the Member Secretary, RPC, and any additional time taken by the transmission licensee for restoration of the element beyond the reasonable time shall be treated as outage time attributable to the transmission licensee. Member Secretary, RPC may consult the transmission licensee or any expert for estimation of reasonable restoration time. Circuits restored through ERS (Emergency Restoration System) shall be considered as available;

   ii) Outage caused by grid incident/disturbance not attributable to the transmission licensee, e.g. faults in a substation or bays owned by another agency causing an outage of the transmission licensee's elements, and tripping of lines, ICTs, HVDC, etc., due to grid disturbance. However, if the element is not restored on receipt of direction from RLDC while normalizing the system following grid incident/disturbance within reasonable time, the element will be considered not available for the period of outage after issuance of RLDC's direction for restoration;

   iii) The outage period which can be excluded for the purpose of sub-clause (i) and (ii) of this clause shall be declared as under:

      a. Maximum up to one month by the Member Secretary, RPC;

      b. Beyond one month and up to three months after the decision at RPC;

      c. Beyond three months by the Commission for which the transmission license shall approach the Commission along with reasons and steps taken to mitigate the outage and restoration timeline.

7. Time frame for certification of transmission system availability: (1) The following schedule shall be followed for certification of availability by the Member Secretary of the concerned RPC:

- Submission of outage data along with documentary proof (if any) and TAFPn calculation by Transmission Licensees to RLDC/ constituents
  – By the 5th of the following month;
- Review of the outage data by RLDC / constituents and forward the same to respective RPC – by 20th of the month;
- Issue of availability certificate by respective RPC – by the 3rd of the next month.

Appendix-V

FORMULAE FOR CALCULATION OF AVAILABILITY OF EACH CATEGORY OF TRANSMISSION ELEMENTS

For AC transmission system

AVo(Availability of o no. of AC lines) = $\dfrac{\sum_{i=1}^{o} Wi(Ti - TNAi)/Ti}{\sum_{i=1}^{o} Wi}$

AVq(Availability of q no. of ICTs) = $\dfrac{\sum_{k=1}^{q} Wk(Tk - TNAk)/Tk}{\sum_{k=1}^{q} Wk}$

AVr(Availability of r no. of SVCs) = $\dfrac{\sum_{l=1}^{r=1} Wl(Tl - TNAl)/Tl}{\sum_{l=1}^{r} Wl}$

AVp(Availability of p no. of Switched Bus reactors) = $\dfrac{\sum_{m=1}^{p} Wm(Tm - TNAm)/Tm}{\sum_{m=1}^{p} Wm}$

AVu(Availability of u no. of STATCOMs) = $\dfrac{\sum_{n=1}^{u} Wn(Tn - TNAn)/Tn}{\sum_{n=1}^{u} Wn}$

AV_{xbp}(Availability of an individual HVDC pole) = $\dfrac{(Tx - TN)}{Tx}$

AV_{ybtb} (Availability of an individual HVDC

Back-to-back Blocks) = $\dfrac{(Ty - TNAy)}{Ty}$

For the HVDC transmission system

For the new HVDC commissioned but not completed twelve months;

For first 12 months: [(AV_{xbp} or AV_{ybtb})x95%/85%], subject to a ceiling of 95%.

Where,

o	=	Total number of AC lines;
AVo	=	Availability of o number of AC lines;
p	=	Total number of bus reactors/switchable line reactors;
AVp	=	Availability of p number of bus reactors/switchable line reactors;
q	=	Total number of ICTs;
AVq	=	Availability of q number of ICTs;
r	=	Total number of SVCs;
AVr	=	Availability of r number of SVCs;.
U	=	Total number of STATCOM;
AVu	=	Availability of u number of STATCOMs;
W*i*	=	Weightage factor for *i*th transmission line;
W*k*	=	Weightage factor for *k*th ICT;
W*l*	=	Weightage factors for inductive & capacitive operation of *l*th SVC;
Wm	=	Weightage factor for mth bus reactor;
Wn	=	Weightage factor for nth STATCOM.

T*i*, , T*k*, T*l*, , T*m*, T*n*, *Tx*, *Ty*	The total hours of ith AC line, k^{th} ICT, l^{th} SVC, m^{th} Switched Bus Reactor & n^{th} STATCOM, x^{th} HVDC pole, y^{th} HVDC back-to-back blocks during the period under consideration (excluding time period for outages not attributed to transmission licensee for the reasons given in Para 5 of the procedure)
$T_{NA}i$,$T_{NA}k$ $T_{NA}l$, $T_{NA}m$,	The non-availability hours (excluding the time period for outages not attributable to transmission licensee taken as deemed availability as $T_{NA}n$, T_{NAn}, $T_{NA}x$, $T_{NA}y$ per Para 5 of the procedure) for i^{th} AC line, k^{th} ICT, l^{th} SVC , m^{th} Switched Bus Reactor, n^{th} STATCOM, x^{th} HVDC pole and y^{th}HVDC back-to-back block.

Schedule: 7

Entire Bid (both financial bid and technical bid) of the Selected Bidder to be attached here

Transmission Service Agreement

Schedule: 8

Contract Performance Guarantee

(To be on non-judicial stamp paper of appropriate value as per Stamp Act relevant to place of execution. Foreign entities submitting Bids are required to follow the applicable law in their country.)

In consideration of the {SPV UNDER INCORPORATION} , Urjanidhi, First Floor, Barakhamba Lane- 1, Connaught Place, New Delhi, Central Delhi- 110001, Delhi agreeing to undertake the obligations under the Transmission Service Agreement dated …….and the other RFP Project Documents and the Nodal Agency and the PFC Consulting Limited, agreeing to execute the *RFP Project Documents* with the Selected Bidder, regarding setting up the Project, the ……. [Insert name and address of the bank issuing the guarantee and address of the head office] (hereinafter referred to as "Guarantor Bank") hereby agrees unequivocally, irrevocably and unconditionally to pay to …… (being the Nodal Agency) at ……[Insert the Place from the address of the Nodal Agency indicated in the TSA] forthwith on demand in writing from the Nodal Agency or any Officer authorized by it in this behalf, any amount up to and not exceeding Rupees …….. Crores (Rs. …….) only [Insert the amount of the bank guarantee] on behalf of {SPV UNDER INCORPORATION}.

This guarantee shall be valid and binding on the Guarantor Bank up to and including ……..and shall not be terminable by notice or any change in the constitution of the Bank or the term of the Transmission Service Agreement or by any other reasons whatsoever and our liability hereunder shall not be impaired or discharged by any extension of time or variations or alternations made, given, or agreed with or without our knowledge or consent, by or between parties to the respective agreement.

Our liability under this Guarantee is restricted to Rs. …….. Crores (Rs. ……..) only. Our Guarantee shall remain in force until …….. [Insert the date of validity of the Guarantee as per Article 3.1.2 of this Agreement]. The Nodal Agency, shall be entitled to invoke this Guarantee up to three hundred sixty five (365) days of the last date of the validity of this Guarantee.

The Guarantor Bank hereby expressly agrees that it shall not require any proof in addition to the written demand from …… (in its roles as the Nodal Agency),

made in any format, raised at the above mentioned address of the Guarantor Bank, in order to make the said payment to Nodal Agency.

The Guarantor Bank shall make payment hereunder on first demand without restriction or conditions and notwithstanding any objection by ..... [Insert name of the Selected Bidder], …….. [Insert name of the TSP] and / or any other person. The Guarantor Bank shall not require Nodal Agency to justify the invocation of this BANK GUARANTEE, nor shall the Guarantor Bank have any recourse against Nodal Agency in respect of any payment made hereunder.

THIS BANK GUARANTEE shall be interpreted in accordance with the laws of India.

The Guarantor Bank represents that this BANK GUARANTEE has been established in such form and with such content that it is fully enforceable in accordance with its terms as against the Guarantor Bank in the manner provided herein.

THIS BANK GUARANTEE shall not be affected in any manner by reason of merger, amalgamation, restructuring, liquidation, winding up, dissolution or any other change in the constitution of the Guarantor Bank.

THIS BANK GUARANTEE shall be a primary obligation of the Guarantor Bank and accordingly Nodal Agency shall not be obliged before enforcing this BANK GUARANTEE to take any action in any court or arbitral proceedings against **{SPV UNDER INCORPORATION}** or the Selected Bidder, as the case may be, to make any claim against or any demand on **{SPV UNDER INCORPORATION}** or the Selected Bidder, as the case may be, or to give any notice to **{SPV UNDER INCORPORATION}** or the Selected Bidder, as the case may be, or to enforce any security held by the Nodal Agency or to exercise, levy or enforce any distress, diligence or other process against **{SPV UNDER INCORPORATION}** or the Selected Bidder, as the case may be.

The Guarantor Bank acknowledges that this BANK GUARANTEE is not personal to Nodal Agency and may be assigned, in whole or in part, (whether absolutely or by way of security) by Nodal Agency to any entity to whom the Nodal Agency is entitled to assign its rights and obligations under the Transmission Service Agreement.

The Guarantor Bank hereby agrees and acknowledges that Nodal Agency shall have a right to invoke this Bank Guarantee either in part or in full, as it may deem fit.

Notwithstanding anything contained hereinabove, our liability under this Guarantee is restricted to Rs. …….. Crores (Rs. ……..) only and it shall remain in force until ……[Date to be inserted on the basis of Article 3.1.2of the Transmission Service Agreement], with an additional claim period of three hundred sixty five (365) days thereafter. This BANK GUARANTEE shall be extended from time to time for such period, as may be desired by {SPV UNDER INCORPORATION}. We

are liable to pay the guaranteed amount or any part thereof under this Bank Guarantee only if Nodal Agency serves upon us a written claim or demand.

In witness where of:

Signature .....

Name: .....

Power of attorney No.: ……

For:

…….. [Insert Name of the Bank]

Banker's Seal and Full Address, including mailing address of the Head Office

ANNEXURE 8A: FORMAT FOR SURETY INSURANCE CONTRACT

(To be on non-judicial stamp paper of appropriate value as per Stamp Act relevant to place of execution.

Foreign entities submitting Bids are required to follow the applicable law of India)

In consideration of the.....[Insert name of the SPV or Selected Bidder on behalf of SPV or Lead Member in case of the Consortium, with address] (hereinafter referred to as the 'Principal Debtor' for the purposes of this Surety Insurance Contract as provided in Section 126 of the Indian Contract Act, 1872) having been selected to undertake the Transmission Project on the terms and conditions contained in the Transmission Service Agreement dated ……/ to be executed as per the Model Transmission Service Agreement provided along with the Request for Proposal ('RFP') and other RFP Project Documents, subject to the condition of providing a Performance Bank Guarantee or a Surety Insurance Contract guaranteeing/insuring the due performance of the obligations under the Transmission Service Agreement, to the Central Transmission Utility of India Limited ('CTUIL') [herein after referred to as the Nodal Agency], the [Insert name and address of the Insurance Company issuing the Surety Insurance Contract and address of the head office] (hereinafter referred to as "Surety") hereby agrees unequivocally, irrevocably, absolutely and unconditionally, without demur, to pay to the Nodal Agency at [Insert Place and Address of the Nodal Agency indicated in Transmission Service Agreement, or to the designated Bank Account of the Nodal Agency, namely……..] forthwith on demand in writing from the Nodal Agency, or any Officer authorized by it in this behalf, intimated to the Surety at the address mentioned above, any amount as may be decided by the Nodal Agency not exceeding Rupees ……Crores (Rs…….) only [Insert the amount of the Surety Insurance Contract]

The Surety hereby acknowledges, accepts and confirms that the Surety has received from the Principal Debtor, by way of premium the entire consideration for the Surety to execute, in favour of the Nodal Agency, this Surety Insurance Contract, as extended by the Surety from time to time and assuming the obligation to pay to the Nodal Agency the amount in terms hereof, without any requirement for payment of any other consideration to the Surety by the Principal Debtor, or otherwise.

This Surety Insurance Contract shall be valid and binding on the Surety, as the principal obligation of the Surety to pay on demand by the Nodal Agency, and shall not be terminable by notice or any change in the constitution of the Surety or the term of the Transmission Service Agreement or by any other reasons whatsoever and the liability hereunder of the Surety shall not be impaired or discharged by any extension of time or variations or alternations made, given, or agreed (with or without the knowledge or consent of the Surety) by or between the Principal Debtor and the Nodal Agency.

The liability of the Surety under this Surety Insurance Contract is restricted to Rupees ……. Crores (Rs) only. The Surety Insurance Contract shall remain in force until [Insert the date of validity of the Surety Insurance Contract]. The Nodal

Agency shall be entitled to invoke this Surety Insurance Contract up to three hundred sixty five (365) days after the last date of the validity of this Surety Insurance Contract.

The Surety hereby expressly agrees that it shall not require any proof except for the written demand from the Nodal Agency, containing the statement that the contractor has failed to meet its contractual obligations raised at the above mentioned address of the Surety (address of Surety office should be a place in NCR only) and the Surety shall pay the amount without reference to the Principal Debtor.

Any such demand made by the Nodal Agency on the Surety shall be conclusive and binding not withstanding any difference between the Nodal Agency and the Principal Debtor or any dispute pending before any Court, Tribunal, Arbitrator or any other authority. The Surety undertakes not to revoke this guarantee during its currency without previous consent of the Nodal Agency and further agrees that the Surety Insurance Contract herein contained shall continue to be enforceable till the Nodal Agency discharges this contract or till the expiry of tenor(including Claim period) whichever is earlier.

The Surety shall make payment hereunder within two (02) working days on first demand without restriction or conditions and notwithstanding any objection by the Principal Debtor, namely, …… [Insert name of SPV], or ……. [Insert name of the Selected Bidder], or ……. [Insert name of the TSP] and/or any other person. The Surety shall not require the Nodal Agency to justify the invocation of this Surety Insurance Contract, nor shall the Surety have any recourse against the Nodal Agency in respect of any payment made hereunder.

This SURETY INSURANCE CONTRACT shall be interpreted in accordance with the laws of India.

This SURETY INSURANCE CONTRACT is being executed by the Surety in terms of the IRDAI (Surety Insurance Contract) Guidelines, 2022 and the Surety hereby acknowledges, accepts and confirms that this Surety Insurance Contract shall be a Contract of Guarantee as provided under Section 126 of the Indian Contract Act, 1872 and further shall be covered by Section 14(3) (b) of the Insolvency and Bankruptcy Code, 2016 (as amended) shall be enforceable as such.

The Surety represents that this Surety Insurance Contract has been established in such form and with such content that it is fully enforceable in accordance with its terms as against the Surety in the manner provided herein.

This SURETY INSURANCE CONTRACT shall not be affected in any manner by reason of merger, amalgamation, restructuring, liquidation, winding up, dissolution or any other change in the constitution of the Surety.

In order to give effect to this surety Bond, the Nodal Agency shall be entitled to act as if the surety insurer were the principal debtor and any change in the constitution of the contractor and/or the surety insurer, whether by their absorption with any other body or corporation or otherwise, shall not in any way or manner affect the liability or obligation of the surety insurer under this surety Bond.

This SURETY INSURANCE CONTRACT shall be a primary obligation of the Surety as a Principal to pay on demand by the Nodal Agency and the Nodal Agency shall not be

obliged before enforcing this Surety Insurance Contract to take any action in any court or arbitral proceedings against the Principal Debtor, namely, …… [Insert name of SPV], or ..... [Insert name of the Selected Bidder], or ..... [Insert name of the TSP] and/or any other person, as the case may be, to make any claim against or any demand on the Principal Debtor, namely, ... [Insert name of SPV], or ……. [Insert name of the Selected Bidder], or ..... [Insert name of the TSP] and/or any other person, as the case may be, or to give any notice to Principal Debtor, namely…… [Insert name of SPV], or ……. [Insert name of the Selected Bidder], or … ..... [Insert name of the TSP] and/or any other person, as the case may be, or to enforce any security held by the Nodal Agency or to exercise, levy or enforce any distress, diligence or other process against the Principal Debtor, namely, …… [Insert name of SPV], or ……. [Insert name of the Selected Bidder], or ……. [Insert name of the TSP] and/or any other person, as the case may be.

The Surety acknowledges that this Surety Insurance Contract is not personal to the Nodal Agency and may be assigned, in whole or in part, (whether absolutely or by way of security) by Nodal Agency to any entity to whom the Nodal Agency is entitled to assign its rights and obligations under the Transmission Service Agreement Provided that any such assignment shall be in compliance with the relevant provisions of the Insurance Act 1938

The Surety hereby agrees and acknowledges that the Nodal Agency shall have a right to invoke this Surety Insurance Contract either in part or in full, as it may deem fit. In case of invocation of this Surety Insurance Contract in part, besides making payment for the part of Surety Insurance Contract invoked, surety at the request of nodal agency shall amend the value of Surety Insurance Contract to the extent of balance amount.

The Surety undertakes not to revoke this Surety Contract during its currency, except with the previous express consent of the Nodal Agency in writing and declares and warrants that it has the power to issue this Surety Contract and the undersigned has full powers to do so on behalf of the Surety

In witness where of:

Signature……..

Name: ……

Power of attorney No/ Employee No. as applicable. :……..

For:

… ..... [Insert Name of the Surety- Insurance Company]

Banker's Seal and Full Address, including mailing address of the Head Office

Notes:

1. The Stamp Paper should be in the name of the Executing Insurance Company.

ANNEXURE 8B: FORMAT FOR ISSUANCE OF PAYMENT ON ORDER INSTRUMENT

Dear Sir,

1. Indian Renewable Energy Development Agency Limited ('IREDA")/PFC/REC has sanctioned a non-fund based limit loan of Rs. (Rupees…… Only) to M/s. …… [Insert name of SPV or selected Bidder] under the Loan Agreement executed on ……. to execute Transmission System Projects.

2. In consideration of the ..... [Insert name of the SPV or Selected Bidder on behalf of SPV or Lead Member in case of the Consortium, with address] for the purposes of this Payment on Order Instrument ("POI") having been selected to undertake the Transmission Project on the terms and conditions contained in the Transmission Service Agreement dated ……/ to be executed as per the draft of the Model Transmission Service Agreement provided along with the Request for Proposal („RFP") and other RFP Project Documents, subject to the condition of providing a POI guaranteeing the due performance of the obligations under the Transmission Service Agreement to the Nodal Agency/Central Transmission Utility of India Limited („CTUIL"), the……[Insert name and address of the non-banking financial institutions(IREDA/PFC/REC) issuing the POI and address of the head office] (hereinafter referred to as "Guarantor") hereby agrees unequivocally, irrevocably, absolutely and unconditionally, without demur, to pay to the Nodal Agency at..... [Insert Place and Address of the Nodal Agency indicated in Transmission Service Agreement, or to the designated Bank Account of the Nodal Agency, namely……..] forthwith on demand in writing from the Nodal Agency, or any Officer authorized by it in this behalf, intimated to the Guarantor at the address mentioned above, any amount as may be decided by the Nodal Agency not exceeding Rupees Crores (Rs) only [Insert the amount of Payment on Order Instrument]

3. At the request of …….and on behalf of M/s. ……, [Insert name of SPV or selected Bidder] this Payment on Order Instrument (POI) for an amount of Rs …… (Rupees ……..) is being issued with IREDA/PFC/REC assuming the obligations to remit such amount to CTUIL from the sanctioned loan.

4. This Payment on Order Instrument comes into force immediately and IREDA/PFC/REC confirms that it has sufficient amount out of the sanctioned loan and shall maintain the required amount to pay under this Payment on Order Instrument, during the validity and claim period of this Payment on Order Instrument.

5. This POI has been issued by IREDA/PFC/REC utilizing the credit limit of M/s……..[Insert name of SPV or selected Bidder] IREDA/PFC/REC confirms that its liability to pay under this Payment on Order

Instrument shall be primary and independent of whether at the time of invocation of Payment on Order Instrument, the sanctioned funds are available or not and notwithstanding, the status of M/s. …… [Insert name of SPV or selected Bidder] at the relevant time and to whether IREDA/PFC/REC is able to recover the amount advanced by it to the said developer.

6. IREDA/PFC/REC and M/s. [Insert name of SPV or selected Bidder] hereby acknowledges, accepts and confirms that this Payment on Order Instrument shall be a Contract of Guarantee as provided under Section 126 of the Indian Contract Act, 1872 and further shall be covered by Section 14(3) (b) of the Insolvency and Bankruptcy Code, 2016 (as amended) shall be enforceable as such.

7. IREDA/PFC/REC liability under this POI is restricted to Rupees Crores (Rs……) only. This POI shall remain in force until…… [Insert the date of validity of the POI]. The Nodal Agency shall be entitled to invoke this POI up to three hundred sixty-five (365) days after the last date of the validity of this POI. This POI shall be extended from time to time for such period, as may be desired by the TSP.

8. The Guarantor hereby expressly agrees that it shall not require any proof except for the written demand from the Nodal Agency, raised at the above-mentioned address of the Guarantor (address of Guarantor office should be in NCR only) and the Guarantor shall pay the amount to the Nodal Agency without reference to the TSP.

9. Any such demand made by the Nodal Agency on the Guarantor shall be conclusive and binding not withstanding any difference between the Nodal Agency and the TSP or any dispute pending before any Court, Tribunal, Arbitrator or any other authority. The Guarantor undertakes not to revoke this guarantee during its currency without previous consent of the Nodal Agency and further agrees that the POI herein contained shall continue to be enforceable till the Nodal Agency discharges this contract or till the expiry of tenure or (including Claim period) whichever is earlier.

10. The Guarantor shall make payment hereunder within two (02) working days on first demand without restriction or conditions and notwithstanding any objection or disputes raised by the TSP, namely, …… [Insert name of SPV], or [Insert name of the Selected Bidder], or ……. [Insert name of the TSP] and/or any other person. The Guarantor shall not require the Nodal Agency to justify the invocation of this POI, nor shall the Guarantor have any recourse against the Nodal Agency in respect of any payment made hereunder.

11. This POI shall be interpreted in accordance with the laws of India.

12. The Guarantor represents that this POI Contract has been established in such

form and with such content that it is fully enforceable in accordance with its terms as against the Guarantor in the manner provided herein.

13. This POI shall not be affected in any manner by reason of merger, amalgamation, restructuring, liquidation, winding up, dissolution or any other change in the constitution of the Guarantor.

14. This POI Contract shall be a primary obligation of the Guarantor as a Principal to pay on demand by the Nodal Agency and the Nodal Agency shall not be obliged before enforcing this POI Contract to take any action in any court or arbitral proceedings against the TSP, namely, …… [Insert name of SPV], or[Insert name of the Selected Bidder], or [Insert name of the TSP] and/or any other person, as the case may be to make any claim against or any demand on the TSP, namely, …… [Insert name of SPV], or ……. [Insert name of the Selected Bidder], or ..... [Insert name of the TSP] and/or any other person, as the case may be, or to give any notice to TSP, namely…… [Insert name of SPV], or..... [Insert name of the Selected Bidder], or ……. [Insert name of the TSP] and/or any other person, as the case may be, or to enforce any security held by the Nodal Agency or to exercise, levy or enforce any distress, diligence or other process against the TSP, namely, …… [Insert name of SPV], or ..... [Insert name of the Selected Bidder], or ……. [Insert name of the TSP] and/or any other person, as the case may be.

15. The Guarantor acknowledges that this POI Contract is not personal to the Nodal Agency and may be assigned, in whole or in part, (whether absolutely or by way of security) by Nodal Agency to any entity to whom the Nodal Agency is entitled to assign its rights and obligations under the Transmission Service Agreement.

16. The Guarantor hereby agrees and acknowledges that the Nodal Agency shall have a right to invoke this POI Contract either in part or in full, as it may deem fit. In case of invocation of this POI Contract in part, besides making payment for the part of POI Contract invoked, Guarantor at the request of Nodal Agency shall amend the value of POI Contract to the extent of balance amount.

IN WITNESS WHERE OF the non- banking financial institutions through its authorized officer, has set its hand and stamp on this……. day of……..at……

Signature……. Name:

…… Power of

attorney No.: …….. For:

….....[Insert Name of the non- banking financial institutions Company]

Seal and Full Address, including mailing address of the Head Office

Schedule: 9

Methodology for determining the Relief Under Force Majeure Event & Change in Law during Construction Period

The relief in the form of revision in tariff due to Force Majeure Event leading to extension of Scheduled COD for a period beyond one hundred eighty (180) days and/ or Change in Law during the construction period shall be as under:

$\Delta T = [(P \times d)] \div [1-(1+ d)^{(-n)}]$

Where,

ΔT = Change in Transmission Charges for each year

P = Sum of cumulative increase or decrease in the cost of the Project due to Change in Law and interest cost during construction corresponding to the period exceeding one hundred eighty (180) due to Force Majeure Event leading to extension of Scheduled COD for a period beyond one hundred eighty (180) days

n = number of years over which the Transmission Charges has to be paid

d = Discount rate as notified by the CERC, applicable on the Bid Deadline

The increase in Transmission Charges as stated above shall be applicable only if the value of increase in Transmission Charges as calculated above exceeds 0.30% (zero point three percent) of the quoted Transmission Charges of the TSP.